CLIMA UNO

COMMERCIAL & RESIDENTIAL AIR CONDITIONING PRODUCTS

# Mini Heat Pump Water Heaters

# Renewable

## Heat pump is renewable and energy saving.

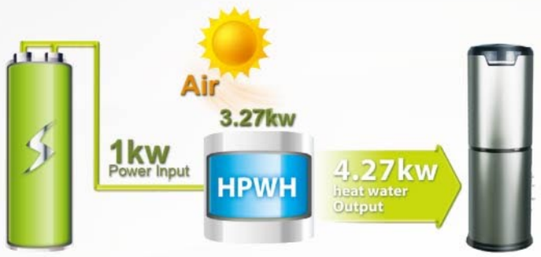


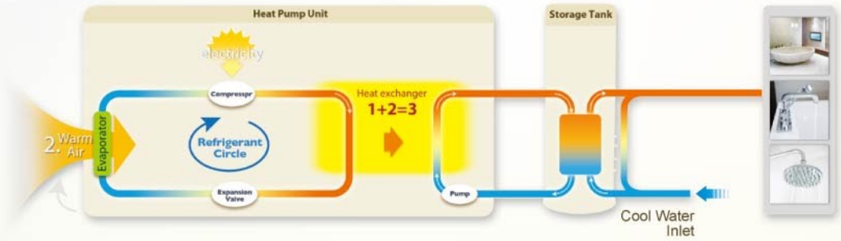


## Why select HPWH?

Power consumption comparison under the same condition to heat 1 ton water from 15˚C to 55˚C(Data of Midea)

| | Midea HPWH | Gas Water Heater | Electric Water Heater | Boiler | Solar Water Heater |
|---|---|---|---|---|---|
| Energy Resource | Air,electricity | Gas | Electricity | Diesel oil | Solar,electricity |
| Transfer Factor | 860kcal/kW.h | 24000kcal/$m^3$ | 860kcal/kW.h | 10200kcal/kg | 860kcal/kW.h |
| Average Efficiency | 4.6 | 0.8 | 0.95 | 0.7 | 2.7 (1/3 weather need Auxiliary Heater) |
| Consumption | 10kW.h | 2.08$m^3$ | 48.9kW.h | 5.6kg | 17.5lkW.h |
| Running Cost(USD) | 0.9 | 5.9 | 4.3 | 6.5 | 1.5 |
| Merit/Demerit | Green,safe,energy saving,friendly for environment and easy for installation | Risk potential danger of fire,explosion,and cause $CO_2$ emission etc. | Risk electric shock emission etc. | Risk potential danger of oil leakage,fire, explosion,and cause $CO_2$ emissiom etc. | Not easy for installation,large area will be occupied,and effective water tank volume is limited. |

# Lineup 2012


**Sanitary Hot Water** 7-24
1.5~7.2KW

**M-Thermal** 25-30
6~16KW

**Pool/Spa** 31-35
6~90KW

**Commercial Application** 36-47
10~77KW

**Heat Recovery** 48-56
3.5~20KW

## Contents

Sanitary Hot Water 07

M-Thermal (Space heating) 25

Pool/Spa 31

Commercial Applications 36

Heat Recovery 48

Reference Projects 57


## How to read the models

CSJ - 200 / (M) S - 540V

- Design Code
- S 380V 50HZ 3ph
  R 380V-415V 50HZ 3ph
  - 220/220-240V~50HZ 1ph
- Type Code
  CLIMA UNO -temperature Cycle-heating Type
  Omit for direct heating
- Heating Capacity (20kw)
- CLIMA UNO Pump Water Heater

L CSJ F - V 120 / N1 - 610

- Design Code
- Refrigerant Type
  N1:R410a
  N2:R407c
  N3:R134a
  N4:$H_2O$
  N5: $CO_2$
  Omit for R22
- Heating Capacity (12Kw)
- Compressor type
  V: DC Inverter Compressor
  D: Digital Scroll Compressor
  Omit for Fixed Speed Compressor
- Split Type
  Omit for integrative type
- CLIMA UNO Water Heat Pump
- Heating and cooling
  Omit for heating

# Combo type 150/190L(50Hz)

**CSJ-15/150RDN3-C**
**CSJ-15/190RDN3-C**

COP: 3.5
(A15/12, W15/45)
Ambient: -30°C~ 43°C

DISINFECT

## Features

- R134a gas, environmentally friendly.
- Output water temperature: 38°C~70 °C.
- Multi modes: Economical, Hybrid and E-heater.
- CE approval.
- Automatic weekly anti-legionella function.
- Indoor and outdoor use.
- Multi protection: PT valve, double high water Temp. Protection switches.(Manual/Automatic)
- Thermal expansion valve for the throttling, high efficiency.
- The condenser coil is wrapped around outside the tank. No contamination potential.
- Close Refrigerant circuit, easy for plumber installation.

## Coil is wrapped outside the tank. No contamination potential.

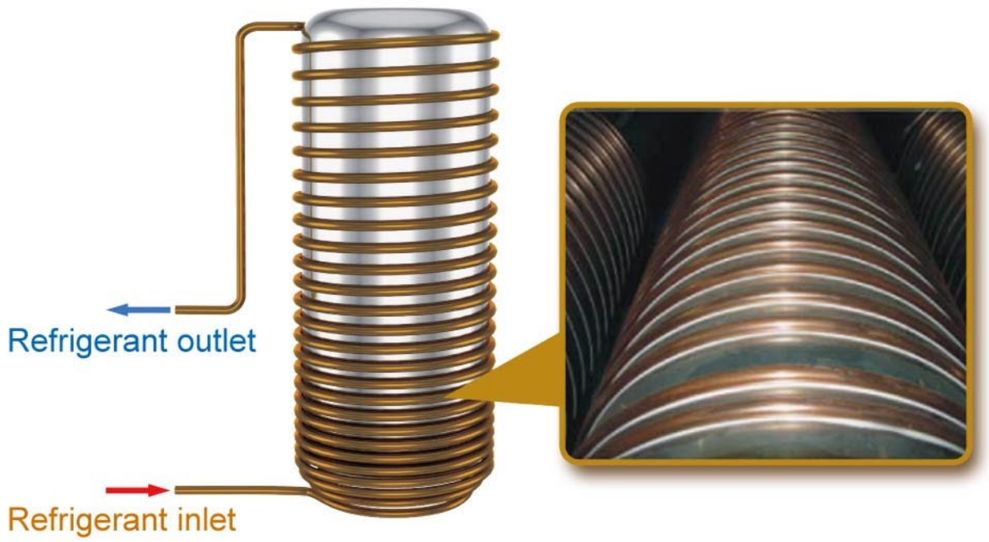




## ■ Combo type 150/190L(50Hz)

| Model | | | CSJ-15/150RDN3 | | | CSJ-15/190RDN3 | | |
|---|---|---|---|---|---|---|---|---|
| Running mode | | | Economy | Hybrid | E-heater | Economy | Hybrid | E-heater |
| Running ambient temp | | °C | 5~43 | -30~43 | -30~43 | 5~43 | -30~43 | -30~43 |
| Output water Temp | | °C | Default 60°C,38°C~70°C | | | Default 60°C,38°C~70°C | | |
| Power supply | | Ph-V-Hz | 1-220~240-50 | | | 1-220~240-50 | | |
| Storage size | | Ltr | 150 | | | 190 | | |
| Water heating | Capacity | kW | 1.50 | 1.86 | 2.00 | 1.50 | 1.86 | 2.00 |
| | Cop | kW/kW | 3.45 | 1.45 | 1.00 | 3.50 | 1.45 | 1.00 |
| | Max. current | A | 2.3 | 9.5 | | 2.3 | 9.5 | |
| Ambient temp | | °C | -30~43 | | | -30~43 | | |
| Unit | Dimension (D×H) | mm | Φ568×1,430 | | | Φ568×1,580 | | |
| | Packing (W×H×D) | mm | 730×1,520×700 | | | 730×1,660×700 | | |
| | Net/gross weight | kg | 87/98 | | | 95/106 | | |
| Noise level | | dB(A) | 48 | | | 48 | | |
| Refrigerant type/quantity | | kg | R134a/0.8 | | | R134a/0.8 | | |
| Refrigerant design pressure | | MPa | 3.0/1.2 | | | 3.0/1.2 | | |
| Tank design pressure | | | 0.2~0.8 | | | 0.2~0.8 | | |
| System protection | | | TCO, TDO, PT valve, automatic | | | TCO, TDO, PT valve, automatic | | |
| Air flow | | $m^3/h$ | 300 | | | 300 | | |
| Compressor | Model | | PJ125G1C-4DRDE | | | PJ125G1C-4DRDE | | |
| | Type | | ROTARY | | | ROTARY | | |
| | Brand | | GMCC | | | GMCC | | |
| | Capacity | kW | 1.390/1.405 | | | 1.390/1.405 | | |
| | Input | kW | 0.515/0.540 | | | 0.515/0.540 | | |
| Fan motor | Model | | YDK12-4H | | | YDK12-4H | | |
| | Brand | | welling | | | welling | | |
| | Input | w | 30 | | | 30 | | |
| | Speed | r/min | 890/580/380 | | | 890/580/380 | | |
| Water pipeline | Water inlet pipe | mm | DN20 | | | DN20 | | |
| | Water outlet pipe | mm | DN20 | | | DN20 | | |
| | Drainage pipe | mm | DN20 | | | DN20 | | |
| | PT valve joint | mm | DN20 | | | DN20 | | |
| | Max. pressure | MPa | 0.8 | | | 0.8 | | |
| | Heat exchanger | | Dividing wall type heat exchanger | | | Dividing wall type heat exchanger | | |
| E-heater | | kW | 2.0×1 | | | 2.0×1 | | |
| Hot water yield | | $m^3/h$ | 0.042 | 0.057 | | 0.042 | 0.057 | |
| Loading Quantity | 20'/40'/40H | Pcs | 24/51/51 | | | 24/51/51 | | |

Remark:
1. The test conditions: outdoor temp. 15/12°C(DB/WB), inlet water temp. 15°C, outlet water temp.45°C.
2. The specification may be changed for product improvement, please refer to the nameplate.

# Combo type 300L(50Hz)

**CE-CSJ-35/300RDN3**

COP: 3.6
(A15/12, W15/45)
Ambient: -30°C~43°C

DISINFECT

## Features

- R134a gas, environmentally friendly.
- Water output temperature: 38°C~60 °C.
- Multi modes: Economical, Hybrid and E-heater.
- CE approval.
- Built-in heater exchanger, compatible to solar thermal or boilers.(Optional)
- Automatic weekly anti-legionella function.
- 30Pa air outlet pressure enables ducted length up to 10 meters.
- Multi protection: PT valve, double high water Temp.
- Protection switches.(Manual/Automatic)
- Four-way valve for automatic defrosting.
- No contamination potential, the condenser coil is wrapped around outside the tank.
- Close Refrigerant circuit, easy for plumber installation.

## Flexible duct installation

Dining room

Cellar

Storage room

## Combo type 300L(50Hz)

| Model | | | CSJ-35/300RDN3 | | |
|---|---|---|---|---|---|
| Running mode | | | Economy | Hybrid | E-heater |
| Running ambient temp | | °C | -7~43 | -30~43 | -30~43 |
| Outwater Temp | | °C | Default 55°C,38°C~60°C | | |
| Power supply | | Ph-V-Hz | 1-220~240-50 | | |
| Storage size | | Ltr | 300 | | |
| Water heating | Capacity | kW | 3.00 | 3.00 | 3.00 |
| | Cop | kW/kW | 3.60 | 3.60 | 1.00 |
| | Max. current | A | 6.5 | 18.7 | 13.0 |
| Ambient temp | | °C | -30~43 | | |
| Unit | Dimension (D×H) | mm | Φ650×1,920 | | |
| | Packing (W×H×D) | mm | 750×2,150×780 | | |
| | Net/gross weight | kg | 117/144 | | |
| Noise level | | dB(A) | 46.6 | | |
| Refrigerant type/quantity | | kg | R134a/1.2 | | |
| Refrigerant design pressure | | MPa | 3.0/1.2 | | |
| Tank design pressure | | MPa | 0.15~1.0 | | |
| Throttling type | | | Electric expansion vavle | | |
| System protection | | | TCO1, TCO2, PT valve, automatic defrosting, high-pressure protector, over-load protectortemp. electric leakage protector etc | | |
| Air flow | | $m^3/h$ | 414/355/312 | | |
| Compressor | Model | | RB233GRDC | | |
| | Type | | Rotary | | |
| | Brand | | Guangzhou Mitsubishi electric | | |
| | Capacity | Btu/h | 9,500 | | |
| | Input | kW | 0.9 | | |
| Fan motor | Model | | YDK30-6R | | |
| | Brand | | welling | | |
| | Input | w | 80 | | |
| | Speed | r/min | 620/530/465 | | |
| Water pipeline | Water inlet pipe | mm | DN20 | | |
| | Water outlet pipe | mm | DN20 | | |
| | Drainage pipe | mm | DN20 | | |
| | PT valve joint | mm | DN20 | | |
| | Max. pressure | MPa | 1.2 | | |
| | Design pressure | MPa | 0.15～1.0 | | |
| | Heat exchanger | | Dividing wall type heat exchanger | | |
| Solar heat exchanger | Water inlet pipe | mm | DN20 | | |
| | Water outlet pipe | mm | DN20 | | |
| | Heat exchanger | | Stainless steel SUS316L | | |
| | Dim.×Length | mm | 22×10,000 | | |
| | Max. pressure | MPa | 0.7 | | |
| E-heate | | kW | 3.0 | | |
| Hot water yield | | $m^3/h$ | 0.086 | 0.086 | 0.086 |
| Loading Quantity | 20'/40'/40H | Pcs | 21/47/47 | | |

Remark:
1. The test conditions: outdoor temp. 15/12°C(DB/WB), inlet water temp. 15°C, outlet water temp.45°C.
2. The specification may be changed for product improvement, please refer to the nameplate.

# Combo type R134a—190L

**CSJ-15/190RDN3-D**

COP: 3.6
(A15/12, W15/45)
Ambient: -30°C~43°C

DISINFECT

## Features

- R134a gas, environmentally friendly.
- Water output temperature: 38ºC~70ºC.
- Multi modes: economy, E-heater and vocation.
- Automatically select mode.
- CE and Intertek approval.
- No contamination potential, the condenser coil is wrapped around outside the tank.
- 30 Pa air outlet pressure enables ducted length up to 10 meters
- User-friendly LCD display for easy interaction.
- Reserved port and optional remote controller.
- Automatic weekly anti-legionella function.
- Four-way valve for automatic defrosting.
- Multi protection: PT valve, double high water temp protection switches (manual and automatic).
- Close refrigerant circuit, easy for plumber installation.

## Flexible duct installation

Dining room

Cellar

Storage room

## Specification

| Model | | | CSJ-15/190RDN3-D | |
|---|---|---|---|---|
| Running mode | | | Econmy | E-heater |
| Running ambient temp | | °C | -7~43 | -30~43 |
| Outwater Temp | | °C | Default 55°C,38°C~70°C | |
| Power supply | | Ph-V-Hz | 1-120~240-50 | |
| Storage size | | Ltr | 190 | |
| Water heating | Capacity | kW | 1.50 | 3.00 |
| | Cop | kW/kW | 3.60 | 1.00 |
| | Max. current | A | 6.5 | 13.0 |
| Ambient temp | | °C | -30~43 | |
| Unit | Dimension (D×H) | mm | Ø568x1,640 | |
| | mmPacking (W×H×D) | mm | 700x1,740x720 | |
| | Net/gross weight | kg | 96/110 | |
| Noise level | | dB(A) | 38 | |
| Refrigerant type/quantity | | kg | R134a/0.95 | |
| Refrigerant design pressure | | MPa | 3.0/1.2 | |
| Tank design pressure | | MPa | 0.15 | |
| System protection | | | TCO1, TCO2, PT valve, automatic defrosting, high-pressure protector,over-load protector temp. electric leakage protector etc. | |
| Air flow | | | 414/355/312 | |
| Compressor | Model | $m^3/h$ | PJ125G1C-4DZDE | |
| | Type | | Rotary | |
| | Brand | | GMCC | |
| | Capacity | | 4740 | |
| | Input | Btu/h | 0.515 | |
| Fan motor | Model | Kw | YDK12-6A | |
| | Brand | | welling | |
| | Input | w | 28 | |
| | Speed | r/min | 900/815/680 | |
| Water pipeline | Water inlet pipe | mm | DN20 | |
| | Wate outlet pipe | mm | DN20 | |
| | Drainage pipe | mm | DN20 | |
| | PTvalve joint | mm | DN20 | |
| | Max.pressure | MPa | 1.2 | |
| | Design pressure | MPa | 0.15 | |
| | Heat exchanger | | Dividing wall type heat exchanger | |
| E-heater | | Kw | 3.0 | |
| Hot water yield | | $m^3/h$ | 0.045 | 0.075 |
| Loading Quantity | 20'/40'/40H | Pcs | 24/51/51 | |

Remark:
1. The test conditions: outdoor temp. 15/12℃(DB/WB), inlet water temp. 15℃, outlet water temp.45℃.
2. The specification may be changed for product improvement, please refer to the nameplate.

# Combo type 190L(60Hz)

**UL-CSJ-15/190RDN3-C**

Ambient: -5°F~130°F

## Features

- EF>2.2 (Energy Factor)rating.
- R134a gas, environmentally friendly.
- Water output temperature: 100°F~140°F.
- Multi modes: Auto mode,economic mode and electric mode.
- UL and Energy Star approval.
- 5m ducted length with 10 Pa.
- Multi protection: PT valve, double high water Temp.
- Protection switches.(Manual/Automatic).
- No contamination potential, the condenser coil is wrapped around outside the tank.
- Close Refrigerant circuit, easy for plumber installation.

## Ducted length up to 5 meters

## ■ Combo type 190L(60Hz)

| Model | | | UL-CSJ-15/190RDN3-C | | |
|---|---|---|---|---|---|
| Running mode | | | Economic | Auto | Electric |
| Running ambient temp | | °F | 45~115 | 45~115 | -5~130 |
| Outwater Temp | | °F | Default 120°F,100°F ~ 140°F | | |
| Power supply | | Ph-V-Hz | 1-208/240-60 | | |
| Storage size | | Ltr | 190 | | |
| Water heating | Capacity | kW | 1.50 | 1.50 | 4.00 |
| | Max. input | kW | 0.80 | 4.50 | 4.00 |
| | Ef | - | 2.20 | 2.30 | 0.82 |
| | FHD | US Gal | - | 56.00 | 52.00 |
| | Max. current | A | 6.5 | 21.6 | 18.7 |
| Ambient temp | | °F | -5~130 | | |
| Unit | Dimension (D×H) | mm | Φ568×1,640 | | |
| | Packing (W×H×D) | mm | 700×1.740×720 | | |
| | Net/gross weight | kg | 96.5/110.6 | | |
| Noise level | | dB(A) | 48 | | |
| Refrigerant type/quantity | | kg | R134a/0.8 | | |
| Refrigerant design pressure | | PSIA | 331/86 at ambient 70°F | | |
| Tank design pressure | | PSI | 150 | | |
| Throttling type | | | Thermal expansion vavle | | |
| System protection | | | TCO, TDO, PT valve | | |
| Air flow | | $m^3/h$ | 370/280/200 | | |
| Compressor | Model | | FFC110HBX | | |
| | Type | | Recip | | |
| | Brand | | Embraco | | |
| | Input | kW | 0.7 | | |
| Fan motor | Model | | YDK19-6B | | |
| | Brand | | welling | | |
| | Input | w | 40 | | |
| | Speed | r/min | 970/750/550 | | |
| Water pipeline | Water inlet pipe | | NPT 3/4 | | |
| | Water outlet pipe | | NPT 3/4 | | |
| | Drainage pipe | | NPT 3/4 | | |
| | PT valve joint | | NPT 3/4 | | |
| Max. pressure | | MPa | 1.0 | | |
| E-heater | | kW | 4.0×2 | | |
| Loading Quantity | 20'/40'/40H | Pcs | 24/51/51 | | |

Remark:
1. The test conditions: 10 CFR Part 430 Energy Conservation Program for Consumer Products: Test Procedure for Water Heaters
2. The specification may be changed for product improvement, please refer to the nameplate.

# Wall-hung combo 80L

**CSJ-15GW/80RDN3**

Ambient: -30°C~43°C

## Features

- COP 3.2 energy saving.
- R134a gas environmentally friendly.
- Water output temperature 38°C~70°C .
- Multi mode: Economical, E-heater, appoint and valley rates.
- CE approval.
- 15pa air outlet pressure enables ducted length up to 6 meter.
- Automatic weekly anti-legionella function.
- Multi protection: double high water temp protection switches (manual and automatic).
- Thermal expansion valve for throttling high efficiency.
- Optional remote controller.
- User-friendly LCD display for easy interaction.
- Four-way valve for automatic defrosting.
- Close refrigerant circuit, easy for plumber install.

## Easy for plumber installation and high efficiency.

## Wall-Mounted monoblock

| Model | | | CE-CSJ-15GW/80RDN3 | |
|---|---|---|---|---|
| Running mode | | | Heat Pump | E-heater |
| Running ambient temp. | | °C | -7~43 | -30~38 |
| Outwater Temp. | | °C | Default 65°C,38°C~70°C | |
| Power supply | | Ph-V-Hz | 1-220~240-50 | |
| Storage size | | Ltr | 80 | |
| Water heating | Capacity | kW | 1.3 | 1.5 |
| | Cop | kW/kW | 3.2 | 1 |
| | Max. current | A | 3.5 | 6.5 |
| Unit | Dimension (D×H) | mm | Φ480×1,250 | |
| | Packing (W×H×D) | mm | 600×1,350×580 | |
| | Net/gross weight | kg | 77/85 | |
| Noise level | | dB(A) | 42 | |
| Refrigerant type/quantity | | kg | R134a/0.6 | |
| Refrigerant design pressure | | MPa | 2.8/1.2 | |
| Tank design pressure | | MPa | 0~0.8 | |
| Air flow | | $m^3/h$ | 250 | |
| Compressor | Model | | PJ125G1C-4DZDE | |
| | Type | | Rotary | |
| | Brand | | Midea-Toshiba | |
| | Capacity | Btu/h | 4,750 | |
| | Input | kW | 0.52 | |
| Fan motor | Model | | YDK8-4R | |
| | Brand | | welling | |
| | Input | w | 34 | |
| | Speed | r/min | 880/720/600 | |
| Water pipeline | Water inlet pipe | mm | DN15 | |
| | Water outlet pipe | mm | DN15 | |
| | Drainage pipe | mm | M50 | |
| Air duct | diameter | mm | 90 | |
| | length | m | 6 | |
| Hot water yield | | $m^3/h$ | 0.037 | 0.043 |
| Loading Quantity | 20'/40'/40H | Pcs | 48/102/136 | |

Remark:
1. The test conditions: outdoor temp. 20/15°C(DB/WB), inlet water temp. 15°C, outlet water temp.55°C.
2. The specification may be changed for product improvement, please refer to the nameplate.

# Split type (AU-RSJF-30/CN3)

**AU-CSJF-30/CN3**

COP: 3.6
(A15/12, W15/45)
Ambient: -30°C~43°C

## Features

- COP 3.6 energy saving.
- R134a gas environmentally friendly.
- Water output temperature 38°C~55°C .
- Multi mode: Economical ,E-heater ,appoint and valley rates .
- WMK SMK and CE approval.
- Multi protection: PT valve, double high water. temp protection switches (manual &automatic).
- Electronic expansion valve for throttling ,high efficiency.
- Easy control and restart function.
- Four-way valve for automatic defrosting.
- Automatic anti-freezing.
- Close refrigerant circuit, easy for plumber installation.
- Double-wall heat exchanger to prevent refrigerant leakage.

## Flexible duct installation

## Specification

| Model | | | CSJF-30/CN3 | |
|---|---|---|---|---|
| Running mode | | | Economy | E-heater |
| Power supply | | Ph-V-Hz | 1-220~240-50 | |
| Ambient temp. | | °C | -7~45 | -20~45 |
| Output water Temp. | | °C | Default 50°C, 40°C~55°C | |
| Storage size of optional tank | | Ltr | 315 | |
| Water heating | Capacity | kW | 3.3 | 3.6 |
| | Input | kW | 0.92 | 3.6 |
| | Cop | kW/kW | 3.59 | 1.00 |
| | rate power input | kW | 1.40 | / |
| | Max. current | A | 6.8 | 16 |
| Outdoor unit | Dimension (WxHxD) | mm | 617x1,058x360 | |
| | Packing (WxHxD) | mm | 735x1,105x430 | |
| | Net/gross weight | kg | 70/73 | |
| Outdoor noise level | | dB(A) | 52 | |
| Refrigerant type/quantity | | kg | R134a/0.75 | |
| Refrigerant design pressure | | MPa | 2.7/ 1.0 | |
| Tank design pressure | | MPa | 0.15/ 1.0 | |
| Air flow | | $m^3/h$ | 1400 | |
| Compressor | Model | | RB233GRDC | |
| | Type | | ROTARY | |
| | Brand | | Mitsubishi | |
| | Capacity | kW | 2.785 | |
| | Input | kW | 0.895 | |
| Fan motor | Model | | AG360A3-AG5 | |
| | Brand | | fans-tech | |
| | Input | w | 70 | |
| | Speed | r/min | 860/610 | |
| Water pipeline | Water inlet pipe | mm | DN20 | |
| | Water outlet pipe | mm | DN20 | |
| Hot water yield | | $m^3/h$ | 0.6 | 0.69 |
| Loading Quantity | 20'/40'/40H | Pcs | 30/63/84 | |

Remark:
1. The test conditions: outdoor temp. 20/15°C(DB/WB), inlet water temp. 15°C, outlet water temp. 55°C.
2. The specification may be changed for product improvement, please refer to the nameplate.

# Split type (water cycle)

**CSJF-32/CN3-A**
**CSJF-32/CN1-A**
**CSJF-50/CN1-B**
**CSJF-72/CN1-B**

Ambient: -15°C~43°C

## Features

- R134a/R410a gas, environmentally friendly.
- Max. water output temperature: 60°C(R410a).
- CE approval.
- Four-way valve for automatic defrosting.
- Double-wall heat exchanger to prevent refrigerant leakage.
- Built-in water pump.
- Close Refrigerant circuit, easy for plumber installation.

## Double-wall heat exchanger

## Split type-water cycle(R410a/R134a)

| Model | | | CE-CSJF-32/CN3-A | CE-CSJF-32/CN1-B | CE-CSJF-50/CN1-B | CE-CSJF72/CN1-B |
|---|---|---|---|---|---|---|
| Power supply | | Ph-V-Hz | 1-220~240-50 | 1-220~240-50 | 1-220~240-50 | 1-220~240-50 |
| Ambient temp. | | °C | -7~43 | -15~43 | -15~43 | -15~43 |
| Outwater Temp. | | °C | Default 50°C, 40°C~70°C | Default 50°C, 40°C~60°C | | |
| Storage size of optional tank | | Ltr | 260/300/350/400/500 | | | |
| Water heating | Capacity | kW | 3.00 | 3.00 | 4.30 | 6.50 |
| | Input | kW | 0.98 | 0.81 | 1.11 | 1.60 |
| | Cop | kW/kW | 3.06 | 3.70 | 3.87 | 4.06 |
| | Max. current | A | 5.3 | 7.5 | 8.3 | 11.1 |
| Outdoor unit | Dimension (W×H×D) | mm | 790×765×275 | 790×765×275 | 790×765×275 | 845×945×335 |
| | Packing (W×H×D) | mm | 905×807×355 | 905×807×355 | 905×807×355 | 965×1,009×395 |
| | Net/gross weight | kg | 60/64 | 56/60 | 62/66 | 81/86.5 |
| Outdoor noise level | | dB(A) | 53 | 53 | 55 | 55 |
| Refrigerant type/quantity | | kg | R134a/0.75 | R410a/0.95 | R410a/1.2 | R410a/1.3 |
| Refrigerant design pressure | | MPa | 3.0/1.5 | 4.4/2.2 | 4.4/2.2 | 4.4/2.2 |
| Tank design pressure | | MPa | 0.2~0.7 | | | |
| Throttling type | | | Electric expansion vavle | Electric expansion vavle | Electric expansion vavle | Electric expansion vavle |
| Air flow | | m³/h | 2,000 | 2,000 | 2,000 | 3,200 |
| Compressor | Model | | RB247GHA | PA118M1C-4FZ2 | PA160X2C-4FT | PA240X2CS-4KU1 |
| | Type | | Rotary | Rotary | Rotary | Rotary |
| | Brand | | MITSUBISHI | Toshiba | Toshiba | Toshiba |
| | Capacity | kW | 2.75 | 2.88 | 3.6 | 5.8 |
| | Input | kW | 0.96 | 1.03 | 1.35 | 1.99 |
| Fan motor | Model | | YDK36-6R-1 | YDK36-6R-1 | YDK36-6R-1 | YDK65-6N |
| | Brand | | welling | welling | welling | welling |
| | Input | w | 74 | 74 | 74 | 134 |
| | Speed | r/min | 770/ 480 | 770/ 480 | 770/ 480 | 830/450 |
| Water pipeline | Water inlet pipe | mm | DN20 | DN20 | DN20 | DN20 |
| | Water outlet pipe | mm | DN20 | DN20 | DN20 | DN20 |
| | Water circulating pipe | mm | DN20 | DN20 | DN20 | DN20 |
| Hot water yield | | m³/h | 0.516 | 0.516 | 0.74 | 1.12 |
| Loading Quantity | 20'/40'/40H | Pcs | 76/160/240 | 76/160/240 | 76/160/240 | 64/134/134 |
| Model (water tank) | | | LSX-260XP/D | LSX-300XP/D | LSX-350XP/D | LSX-400XP/D |
| Dimension | | mm | Φ560×1,623 | Φ560×1,853 | Φ630×1,667 | Φ630×1,884 |
| Packing (W×H×D) | | mm | 630×1,710×635 | 630×1,960×635 | 690×1,760×705 | 690×1,980×705 |
| Net/gross weight | | kg | 49/57 | 55/63 | 55/64 | 66/76 |
| Loading Quantity | 20'/40'/40H | Pcs | 30/63/84 | 27/54/72 | 27/60/60 | 24/54/54 |

Remark:
1. The test conditions: outdoor temp. 7/6°C(DB/WB), inlet water temp. 30°C, outlet water temp.35°C.
2. The specification may be changed for product improvement, please refer to the nameplate.

# Split type (Refrigerant cycle)

**CSJ-28/RD-190XP/A**

Ambient: -30°C~43°C

## Features

- Water output temperature: 38°C~70°C.
- Heating element inside the tank.
- Easy installation and maintenance.
- No contamination potential, the condenser coil is wrapped around outside of the tank.

## Heating element inside the tank to guarantee hot water supply

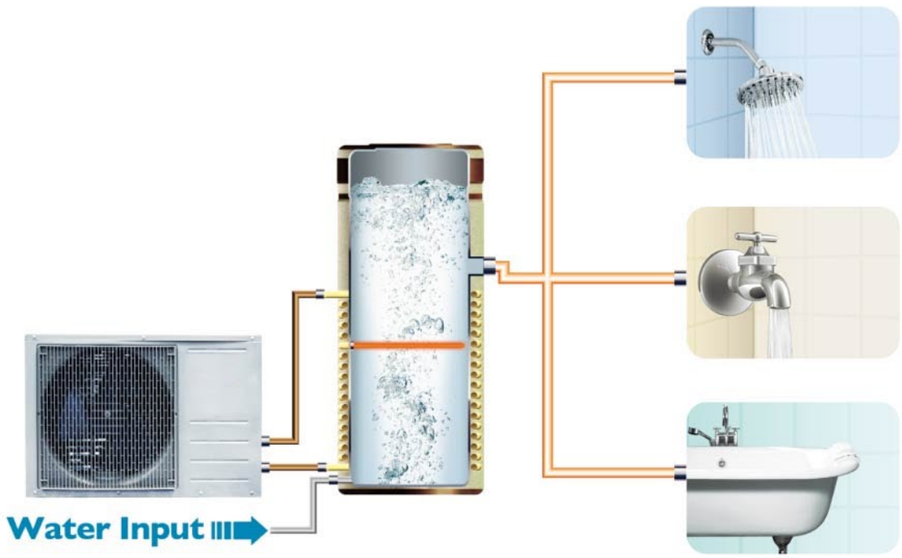


## Split type-refrigerant cycle

| Model | | | CSJ-28/RD-190XP/A | | |
|---|---|---|---|---|---|
| Running mode | | | Economy | Hybrid | E-heater |
| Running ambient temp | | °C | -7~43 | -30~43 | -30~43 |
| Outwater Temp | | °C | Default 50°C, 38°C~70°C | | |
| Power supply | | Ph-V-Hz | 1-220-50 | | |
| Storage size | | Ltr | 190 | | |
| Water heating | Capacity | kW | 2.80 | 2.40 | 2.00 |
| | Input | kW | 0.90 | 1.50 | 2.00 |
| | Cop | kW/kW | 3.11 | 1.60 | 1.00 |
| | Max. current | A | 11.6 | | |
| Ambient temp | | °C | -30~43 | | |
| Outdoor unit | Dimension (D×H) | mm | 700×534×234 | | |
| | Packing (W×H×D) | mm | 825×585×375 | | |
| | Net/gross weight | kg | 28/30 | | |
| Noise level | | dB(A) | 49 | | |
| Refrigerant type/quantity | | kg | R22/0.77 | | |
| Refrigerant design pressure | | MPa | 3.3/1.65 | | |
| Tank design pressure | | MPa | 0.15~0.7 | | |
| Throttling type | | | Electric expansion vavle | | |
| Compressor | Model | | GP12PH150X1C-8DZD2 | | |
| | Type | | Rotary | | |
| | Brand | | Midea-Toshiba | | |
| | Capacity | kW | 2.5 | | |
| | Input | kW | 0.82 | | |
| Fan motor | Model | | YDK24-6T3 | | |
| | Brand | | welling | | |
| | Input | w | 60 | | |
| | Speed | r/min | 870/690/44 | | |
| Water pipeline | Water inlet pipe | mm | DN15 | | |
| | Water outlet pipe | mm | DN15 | | |
| | Heat exchanger | | Dividing wall type heat exchanger | | |
| E-heater | | kW | 2.0 | | |
| Hot water yield | | $m^3/h$ | 0.06 | 0.052 | 0.043 |
| Loading Quantity | 20'/40'/40H | Pcs | 168/344/344 | | |
| Model (water tank) | | | PLSX-190(28)TP/A | | |
| Packing (W×H×D) | | mm | 730×1,430×700 | | |
| Net/gross weight | | kg | 75/85 | | |
| Loading Quantity | 20'/40'/40H | Pcs | 31/75/75 | | |

Remark:
1. The test conditions: outdoor temp. 20/15°C(DB/WB), inlet water temp. 15°C, outlet water temp.55°C.
2. The specification may be changed for product improvement, please refer to the nameplate.

# Split type (Refrigerant cycle)

**CSJF-32/R**
**CSJF-50/R**

Tank: 150/200/260L
Ambient: -7°C~43°C

## Features

- Max. water output temperature:55°C.
- No contamination potential, the condenser coil is wrapped around outside of the enamel tank.
- Easy for installation and maintenance.

## High efficiency

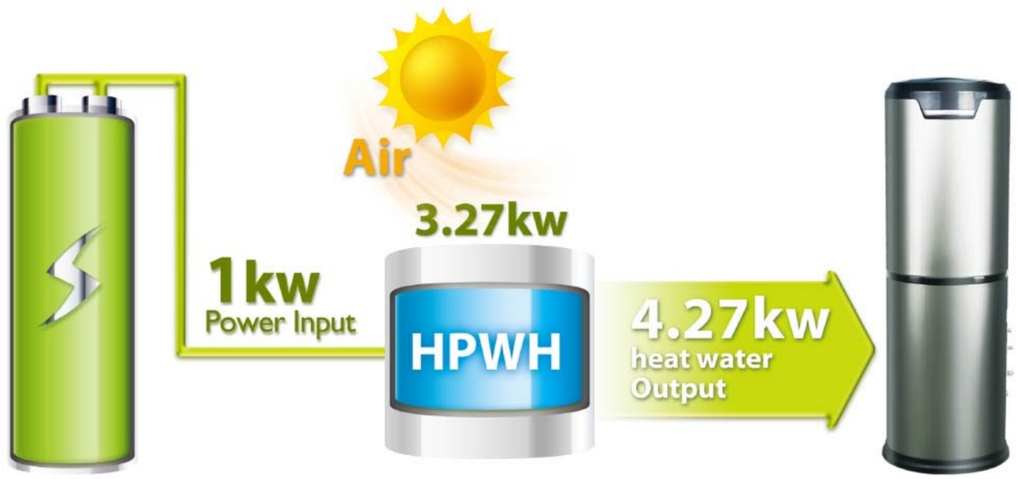




## Split type-refrigerant cycle

| Model | | | CSJF-32/R | | CSJF-50/R | |
|---|---|---|---|---|---|---|
| Power supply | | Ph-V-Hz | 1-220~240-50 | | 1-220~240-50 | |
| Ambient temp. | | °C | -7~43 | | -7~43 | |
| Output water Temp. | | °C | Default 50°C, 40°C~55°C | | | |
| Storage size of optional | | Ltr | 150/200 | | 200/260 | |
| tank | Capacity | kW | 3.15 | | 5 | |
| Water heating | Input | kW | 0.84 | | 1.32 | |
| | Cop | kW/kW | 3.75 | | 3.79 | |
| | Max. current | A | 5.6 | | 8.2 | |
| Outdoor unit | Dimension (W×H×D) | mm | 700×534×234 | | 790×552×225 | |
| | Packing (W×H×D) | mm | 825×583×375 | | 915×590×365 | |
| | Net/gross weight | kg | 27.5/32 | | 38.5/44 | |
| Outdoor noise level | | dB(A) | 49 | | 55 | |
| Refrigerant type/quantity | | kg | R22/0.87 | | R22/1.85 | |
| Refrigerant design pressure | | MPa | 3.3/1.8 | | 3.3/1.8 | |
| Tank design pressure | | MPa | 0.15~0.7 | | | |
| Compressor | Model | | PH150G1C-4DZDE | | PH240X2C-8FTC1 | |
| | Type | | ROTARY | | ROTARY | |
| | Brand | | Toshiba | | Toshiba | |
| | Capacity | kW | 2.6 | | 4.1 | |
| | Input | kW | 0.83 | | 1.28 | |
| Fan motor | Model | | YDK24-6T2 | | YDK36-6R | |
| | Brand | | welling | | welling | |
| | Input | w | 62 | | 80 | |
| | Speed | r/min | 860/470 | | 775/510 | |
| Water pipeline | Water inlet pipe | mm | DN15 | | DN15 | |
| | Water outlet pipe | mm | DN15 | | DN15 | |
| Hot water yield | | m³/h | 0.068 | | 0.107 | |
| Loading Quantity | 20'/40'/40H | Pcs | 168/344/344 | | 102/207/276 | |
| Model (water tank) | | | PLSX-150(32)XP/C | PLSX-200(32)XP/C | PLSX-200(50)XP/B | PLSX-260(50)XP/B |
| Packing (W×H×D) | | mm | 510×1,640×515 | 580×1,675×585 | 580×1,675×585 | 625×1,710×635 |
| Net/gross weight | | kg | 32/37 | 43/49 | 47/53 | 52/60 |
| Loading Quantity | 20'/40'/40H | Pcs | 56/120/155 | 52/108/108 | 52/108/108 | 30/63/84 |

Remark:
1. The test conditions: outdoor temp. 20/15°C(DB/WB), inlet water temp. 15°C, outlet water temp.55°C.
2. The specification may be changed for product improvement, please refer to the nameplate.

# M -Thermal

GREEN SOLUTION FOR SPACE HEATING AND SANITARY HOT WATER

# M-Thermal

## Features

- R410a gas, environmental friendly.
- DC Inverter Technology.

The advancement of the inverter technology creates more quiet, economical and powerful air conditioning systems.

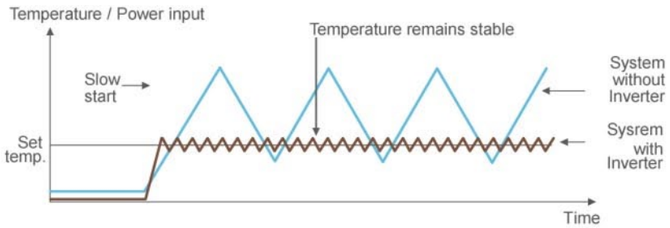


- Automatic weekly anti-legionella function

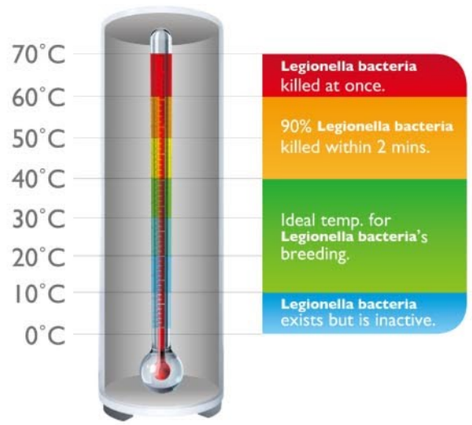




- Compatible to solar thermal and boilers
- Total Heating Solution

When floor heating is conducted in a new house, warm air spreads gently across the house, making it comfortable and enabling the use of broad space without necessitating radiators or FCU.

- Low Running Costs

When you use a gas or oil boiler, or an electric radiator, you can get exactly the same effect based on your input. The price of electricity is stable relative to those of oil or gas, thus cutting more costs as the time passes.

- Best Heating Efficiency

M-thermal, with the application of the same amount of energy, emits more than four energy items, which can be used. This is the strength of the Air to Water Heat pump to which inverter technology is applied.

Energy Efficiency Comparison

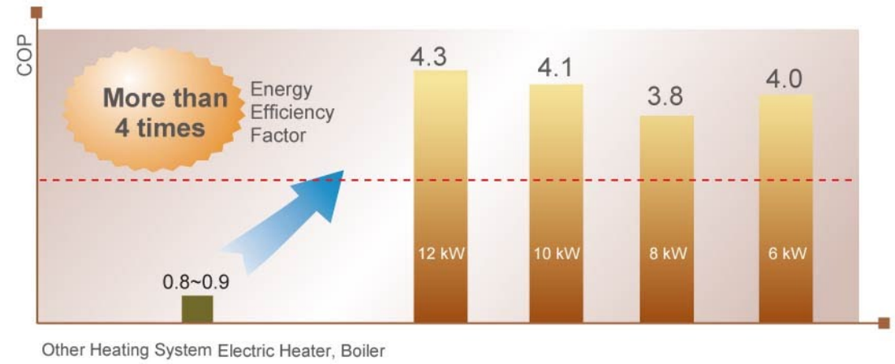


- Convenient and Reliable System

1. M-thermal uses the Easy Controller to check detailed operational information and a change in temperature of the whole system.
2. Easy to handle and install.
3. Reliable Performance at lower temperature.

- Comfort System

1. When floor heating is applied, warm air spreads gently across the house, making it comfortable. The system can help blood circulation and metabolism, further boosting our health.
2. The System can be four season used because it provides a heating solution in general and at the same time it also provides a cooling solution in summer.
3. The installation of M-Thermal will eliminate oil or gas tank, making the household surrounding neat and safe, enabling the use of more space, and avoiding refueling.

## Operation temperature range

- Use the system in the following temperature for safe and effective operation. The max operation temperature for the heat pump. (Cooling/Heating)

| Model | Outdoor temperature | Water temperature |
|---|---|---|
| Cooling operation | 15ºC~43ºC | 7ºC ~ 22ºC |
| Heating operating | -15ºC~43ºC | 15ºC~55ºC |

## ■ Total solution for space heating & sanitary

| Hydraulic indoor unit | | | SMK-120/CD30GN1 | CE-SMK-100/CD30GN1 | SMK-80/CD30GN1 | SMK-60/CD30GN1 |
|---|---|---|---|---|---|---|
| Power supply | | Ph-V-Hz | 1-220~240-50 | 1-220~240-50 | 1-220~240-50 | 1-220~240-50 |
| Function | Types | | Heating&Cooling | Heating&Cooling | Heating&Cooling | Heating&Cooling |
| | Space Heating | °C | 15~55 | 15~55 | 15~55 | 15~55 |
| | Space Cooling | °C | 7~22 | 7~22 | 7~22 | 7~22 |
| | Sanitary Hot Water | °C | 35~60 | 35~60 | 35~60 | 35~60 |
| | Max. current | A | 27 | 27 | 27 | 27 |
| Noise level | | dB(A) | 32 | 32 | 32 | 32 |
| Unit | Dimension (W×H×D) | mm | 900×500×375 | 900×500×375 | 900×500×375 | 900×500×375 |
| | Packing (W×H×D) | mm | 1,110×610×510 | 1,110×610×510 | 1,110×610×510 | 1,110×610×510 |
| | Net/gross weight | kg | 63/75 | 63/75 | 63/75 | 60/72 |
| Element | Size | kW | 1.5 | 1.5 | 1.5 | 1.5 |
| | Quantity | | 2 | 2 | 2 | 2 |
| Water pipeline | Water inlet pipe | mm | DN32 | DN32 | DN32 | DN32 |
| | Water outlet pipe | mm | DN32 | DN32 | DN32 | DN32 |
| Loading Quantity | 20'/40'/40H | Pcs | 66/138/184 | 66/138/184 | 66/138/184 | 66/138/184 |
| DC Inverter outdoor unit | | | LRSJF-V120/N1-610 | CE-LRSJF-V100/N1-610 | LRSJF-V80/N1-310 | LRSJF-V60/N1-310 |
| Power supply | | Ph-V-Hz | 1-220~240-50 | 1-220~240-50 | 1-220~240-50 | 1-220~240-50 |
| Max. current | | A | 23 | 22 | 15 | 14 |
| Heating | Capacity | kW | 12 | 10 | 8 | 6 |
| | COP | kW/kW | 4.3 | 4.1 | 3.8 | 4.0 |
| | Ambient Temp. | °C | -15~43 | -15~43 | -15~43 | -15~43 |
| Cooling | Capacity | kW | 9.3 | 8.5 | 6.3 | 6.3 |
| | COP | kW/kW | 2.3 | 2.3 | 2.1 | 2.3 |
| | Ambient Temp. | °C | 15~43 | 15~43 | 15~43 | 15~43 |
| Unit | Dimension (W×H×D) | mm | 900×1,327×348 | 900×1,327×320 | 895×862×313 | 895×862×313 |
| | Packing (W×H×D) | mm | 1,016×1456×435 | 1,016×1456×435 | 1,025×910×410 | 1,025×910×410 |
| | Net/gross weight | kg | 89/101 | 89/101 | 66/70 | 66/70 |
| Noise level | | dB(A) | 58 | 58 | 58 | 58 |
| Refrigerant | type/quantity | kg | R410a/2.7kg | R410a/2.7kg | R410a/2.4kg | R410a/2.4kg |
| | system pressure | MPa | 4.4/2.6 | 4.4/2.6 | 4.4/2.6 | 4.4/2.6 |
| Compressor | Model | | TNB306FPGMC | TNB306FPGMC | TNB220FLHMC | TNB220FLHMC |
| | Type | | Rotary | Rotary | Rotary | Rotary |
| | Brand | | mitsubishi | mitsubishi | mitsubishi | mitsubishi |
| | Capacity | kW | 9.8 | 9.8 | 7.1 | 7.1 |
| Fan motor | Brand | | panasonic | panasonic | welling | welling |
| | Input | w | 100×2 | 100×2 | 168 | 168 |
| | Speed | | 800 | 800 | 877/749 | 877/749 |
| Loading Quantity | 20'/40'/40H | Pcs | 28/58/58 | 28/58/58 | 60/126/126 | 60/126/126 |
| Sanitary hot water tank | | | LSX-300XP/D30B11 | LSX-200XP/D30B11 | LSX-150XP/D30B7 | LSX-150XP/D30B7 |
| Power supply | | Ph-V-Hz | 1-220~240-50 | 1-220~240-50 | 1-220~240-50 | 1-220~240-50 |
| Storage size | | Ltr | 300 (Optional 150/200) | 200 (Optional 150/300) | 150 (Optional 300/200) | 150 (Optional 300/200) |
| Max. water output temp. | | °C | 60 | 60 | 60 | 60 |
| Dimension (D×H) | | mm | Φ580×1800 | Φ580×1,320 | Φ580×1050 | Φ580×1050 |
| Packing (W×H×D) | | mm | 670×1,885×670 | 670×1,400×670 | 670×1,135×670 | 670×1,135×670 |
| Net/Gross weight | | kg | 75/84 | 60/68 | 49/55 | 49/55 |
| Element | | kW | 3.0 | 3.0 | 3.0 | 3.0 |
| Tank material | | | SUS304 | SUS304 | SUS304 | SUS304 |
| Water pipeline | Water inlet pipe | mm | DN20 | DN20 | DN20 | DN20 |
| | Water outlet pipe | mm | DN20 | DN20 | DN20 | DN20 |
| | PT valve joint | MPa | DN20 | DN20 | DN20 | DN20 |
| Loading Quantity | 20'/40'/40H | Pcs | 27/57/76 | 27/57/76 | 27/57/76 | 27/57/76 |
| Solar kit | | | TMK-01 | TMK-01 | TMK-01 | TMK-01 |
| Power supply | | Ph-V-Hz | 1-220~240-50 | 1-220~240-50 | 1-220~240-50 | 1-220~240-50 |
| Dimension (W×H×D) | | mm | 810×310×295 | 810×310×295 | 810×310×295 | 810×310×295 |
| Packing (W×H×D) | | mm | 830×340×315 | 830×340×315 | 830×340×315 | 830×340×315 |
| Net weight | | kg | 8/10 | 8/10 | 8/10 | 8/10 |
| solar coils | OD+T | mm×mm | ¢22×0.8 | ¢22×0.8 | ¢22×0.8 | ¢22×0.8 |
| | length | m | 11 | 11 | 11 | 11 |
| | material | | SUS316L | SUS316L | SUS316L | SUS316L |
| | inlet pipe | mm | DN20 | DN20 | DN20 | DN20 |
| | outlet pipe | mm | DN20 | DN20 | DN20 | DN20 |
| Loading Quantity | 20'/40'/40H | Pcs | 300/624/728 | 300/624/728 | 300/624/728 | 300/624/728 |

The testing Condition:
1. Heating: Outdoor temp. 7/6°C(DB/WB), inlet water temp. 30°C, outlet water temp. 35°C.
2. Cooling: Outdoor temp. 35/24°C(DB/WB), inlet water temp. 12°C, outlet water temp. 7°C.



## Installation Diagram

■ M-thermal+ Radiator + Underfloor Heating + Sanitary Tank The system can be combined with:

1. Under floor heating.
2. Fan coil units.
3. Low temperature radiators, to provide your customers the comfort they require.
4. A sanitary hot water tank to supply hot water needs.

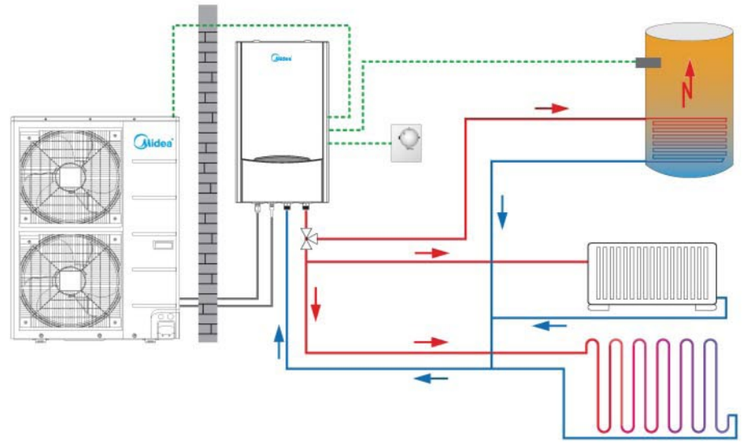

■ M-thermal + Radiator + Underfloor Heating + Sanitary Tank + Solar Panel The system can be combined with:

1. Under floor heating.
2. Fan coil units.
3. Low temperature radiators, to provide your customers the comfort they require.
4. A sanitary hot water tank to supply hot water needs.
5. Solar collectors, with optional solar kit, to compliment the production of hot water.

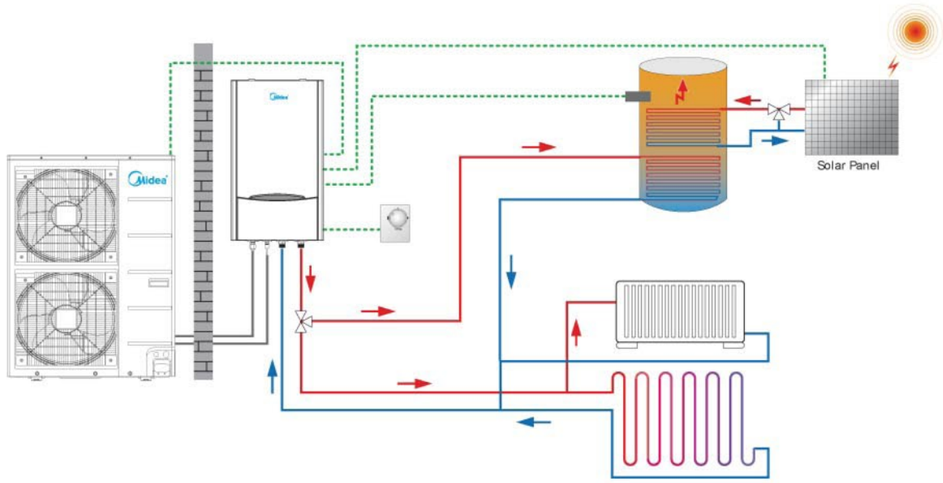

# Pool dedicated series

## Domestic Pool/Spa

**CE-LCSJ-60/NYN1**
**CE-LCSJ-80/NYN1**
**CE-LCSJ-120/NYN1**
**CE-LCSJ-140/NYN1**

Ambient: -7°C~43°C

## Features

- Water temperature: 10°C~35°C.
- Titanium Heat exchanger.
- LCD display and timer control.
- 15 m wire controller.
- Automatic defrosting function.
- Heating and cooling.

### Operation temperature range

| | | |
|---|---|---|
| Water cooling | Outdoor temperature | 15°C~43°C |
| Water heating | Outdoor temperature | -7°C~38°C |

### Unit selection

| capacity(kW) | 6 | 8 | 12 | 14 |
|---|---|---|---|---|
| Applicable range($m^3$) | 40 | 50 | 60-85 | 75-100 |

## Titanium heat exchanger

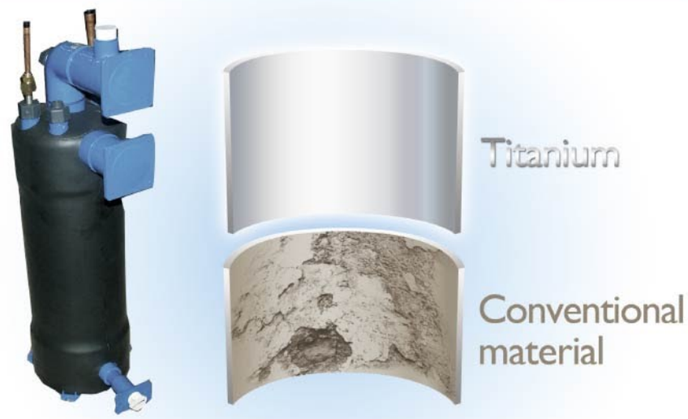

## Domestic pool HPWH

| Model | | | LCSJ-60/NYN1 | LCSJ-80/NYN1 | LCSJ-120/NYN1 | LCSJ-140/NYN1 |
|---|---|---|---|---|---|---|
| Power supply | | Ph-V-hz | 1-230-50 | 1-230-50 | 1-230-50 | 1-230-50 |
| Heating mode | water outlet Temp | °C | Default 28°C, 20°C~35°C | | | |
| Cooling mode | water outlet Temp | °C | Default 28°C, 10°C~30°C | | | |
| Max. current | | A | 6.3 | 8.0 | 13.7 | 16.0 |
| Heating | Capacity | kW | 6 | 8 | 12.0 | 14.0 |
| | Input | kW | 1.15 | 1.52 | 2.40 | 2.55 |
| | Outdoor ambient temp | °C | -7°C~38 | -7°C~38 | -7°C~38 | -7°C~38 |
| | COP | kW/kW | 5.22 | 5.27 | 5.00 | 5.49 |
| Cooling | Capacity | kW | 4.0 | 5.8 | 8.4 | 10.4 |
| | Input | kW | 1.3 | 1.5 | 2.4 | 2.9 |
| | Outdoor ambient temp | °C | 15°C~43 | 15°C~43 | 15°C~43 | 15°C~43 |
| | COP | kW/kW | 3.2 | 3.9 | 3.5 | 3.6 |
| Outdoor unit | Dimension (W×H×D) | mm | 1,015×705×385 | 1,015×705×386 | 1,050×855×315 | 1,050×855×315 |
| | Packing (W×H×D) | mm | 1,095×840×445 | 1,095×840×445 | 1,160×980×410 | 1,160×980×410 |
| | Net/Gross weight | kg | 64/73 | 66/75 | 75/85 | 75/85 |
| Max power | | kW | 1.7 | 2.0 | 3.3 | 3.75 |
| Outdoor noise level | | dB(A) | 58 | 58 | 58 | 58 |
| Refrigerant type/Quantity | | Kg | R410A/1.0 | R410A/1.25 | R410A/1.6 | R410A/1.85 |
| Compressor | Heat exchanger material | | Titanium-tube | | | |
| | Water inlet pipe | mm | DN50 | DN50 | DN50 | DN50 |
| | Water outlet pipe | mm | DN50 | DN50 | DN50 | DN50 |
| | Drain pipe diameter | mm | DN25 | DN25 | DN25 | DN25 |
| | Max. pressure | MPa | 0.4 | 0.4 | 0.4 | 0.4 |
| Water contented capacity ($m^3$) | | | 40.0 | 50.0 | 60~85 | 75~100 |
| Wire controller | | | KJRH-90B/E | KJRH-90B/E | KJRH-90B/E | KJRH-90B/E |
| Hot Water Yield | | $m^3/h$ | 2.6 | 3.4 | 5.2 | 6.0 |
| Loading Quantity | 20'/40'/40H | Pcs | 52/108/162 | 52/108/162 | 56/116/116 | 56/116/116 |

Remark:
1. The test conditions:
   Water Heating: outdoor temp. 24/19°C(DB/WB), inlet water temp. 27°C,outlet water temp. 29°C
   Water Cooling: outdoor temp. 35/24°C(DB/WB), inlet water temp. 27°C
2. The specification may be changed for product improvement, please refer to the nam eplate

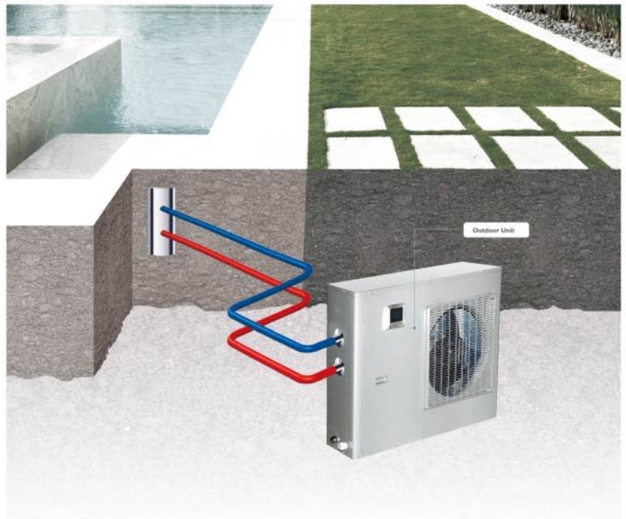




# Commercial Pool/Spa

**LCSJ-450/SY**
**LCSJ-900/SY**

Ambient: -7°C~43°C

## Features

- Excellent Efficiency.
  High efficiency scroll compressor .
  Titanium tube heat exchanger .
- Water temperature: 7~43°C.
- Wire controller use for easy setting and operation.
  LCD display and time clock.
- Cooling heating and hot water, total solution for water demand.

Swimming pool heating and constant temperature system

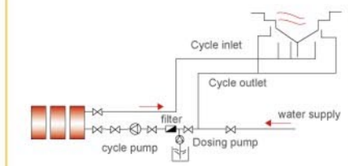


Central hot water supply system

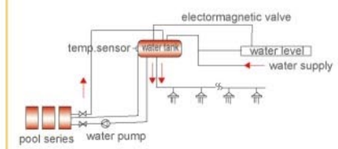


Refrigeration/heating system

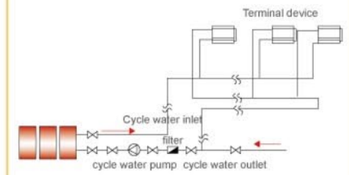


- Automatic defrosting function.
- Automatic water pipe anti-frozen.
- Easy to install and simple for maintenance.

## Operation temperature range

| | | |
|---|---|---|
| cooling | Outdoor temp. | 21°C~43°C |
| | Indoor temp. | ≥17°C |
| heating | Outdoor temp. | 7~43°C |
| | Water inlet temp. | 0~40°C |

## Commercial pool HPWH

| Model | | | LCSJ-450/SY-820 | LCSJ-900/SY-820 |
|---|---|---|---|---|
| Power supply | | Ph-V-hz | 3-380-50 | 3-380-50 |
| Heating mode | water outlet Temp | °C | Default 28°C, 20°C~40°C | |
| Cooling mode | water outlet Temp | °C | Default 28°C, 7°C~30°C | |
| Heating | Capacity | kW | 45 | 90 |
| | Input | kW | 8.5 | 16.4 |
| | Outdoor ambient temp | °C | -7°C~43°C | |
| | COP | kW/kW | 5.29 | 5.49 |
| Cooling | Capacity | kW | 40 | 80 |
| | Input | kW | 11.5 | 20.5 |
| | Outdoor ambient temp | °C | 21°C~43°C | |
| | COP | kW/kW | 3.48 | 3.90 |
| Outdoor noise level | | dB(A) | 65 | 65 |
| Refrigerant type/Quantity | | Kg | R22/7 | R22/14 |
| water side | Heat exchanger material | | Titanium-tube | |
| | Water inlet pipe | | DN50 | DN100 |
| | Water outlet pipe | mm | DN50 | DN100 |
| | Max. pressure | MPa | 1 | 1 |
| Outdoor unit | Dimension (W×H×D) | mm | 1,514×1,820×850 | 2,000×1,970×900 |
| | Packing (W×H×D) | mm | 1,620×2,041×1,034 | 2,110×2,150×1,000 |
| | Net/Gross weight | kg | 380/400 | 580/650 |
| Wire controller | | | KJR-08B/H | KJR-08B/H |
| Hot Water Yield | | $m^3/h$ | 15 | 30 |
| Loading Quantity | 20'/40'/40H | Pcs | 6/14/14 | 5/12/12 |

Remark:
1. The test conditions:
   Water Cooling: outdoor temp. 24/19°C(DB/WB), inlet water temp. 27°C,outlet water temp. 29°C
   Water Heating: outdoor temp. 35/24°C(DB/WB), inlet water temp. 27°C
2. The specification may be changed for product improvement, please refer to the nameplate.

## The Engineering Application Schemes

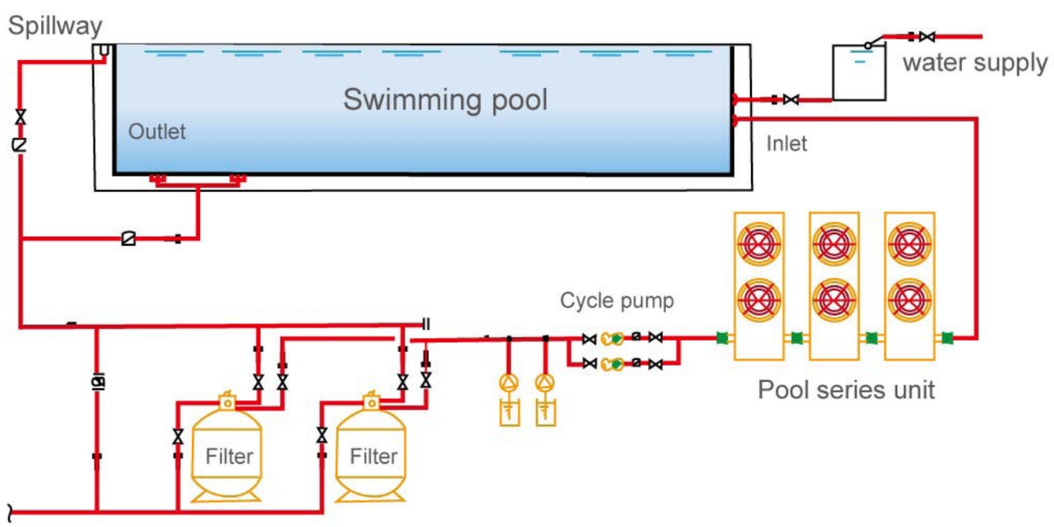

# Direct &cycle heating (R410a)

**CSJ-100/N1-540V-D**
**CSJ-200/SN1-540V-D**
**CSJ-380/SN1-820-D**

Ambient: -7°C~43°C

## Features

- R410a gas, environmentally friendly.
- Free modular combination.
- The unique defrosting flow path.
  Air side reserved special defrosting flow path, when the system is defrosting, the four-way valve is reversing , the system will absorb energy from special defrosting flow path, the defrosting progress will have no impact on water temperature.
- Double heat source for defrosting.
  The units use the refrigerant heating technology to increase the total absorption energy.

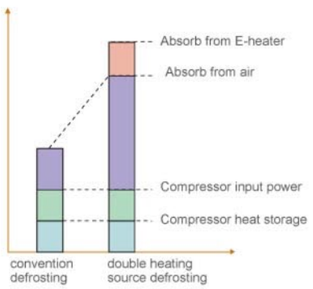


- Double throttling technology to ensure the temperature of base plate.

Double throtling technology

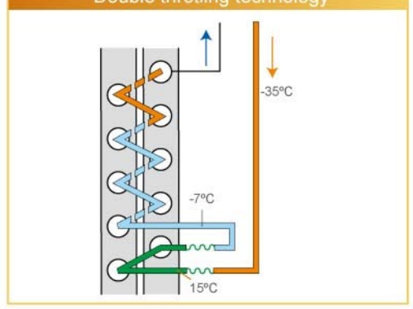


- High efficiency compressor.
  Copeland's efficient scroll compressor.
  Flexible design, Low temperature reliable operation.
  Proprietary gas balance and fluid balance design to ensure the unit reliable operation.
- Hot water valve supplies hot water with stable temperature and expands the life span of compressor.
- CE approval.

Compressor Parallel technology

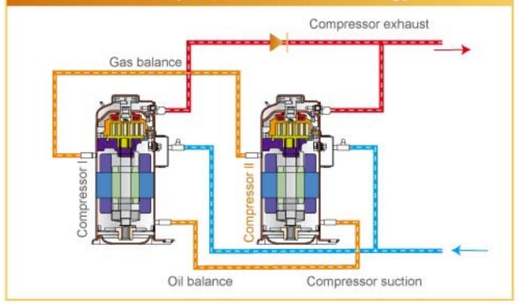




## Simple refrigerating system diagram

### 10kw/20kw refrigerating system diagram

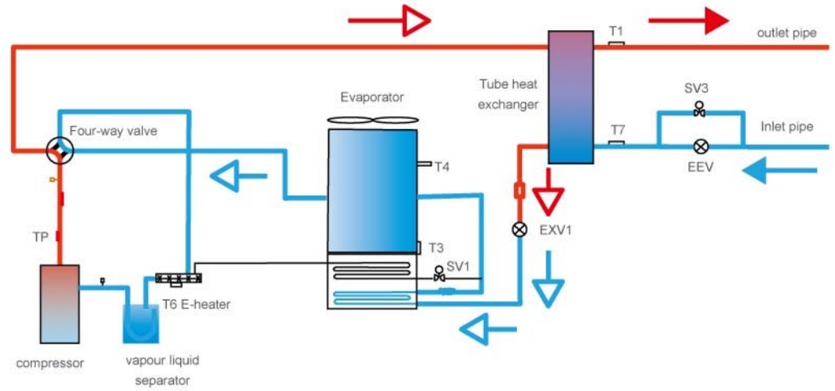


### 38kw refrigerating system diagram

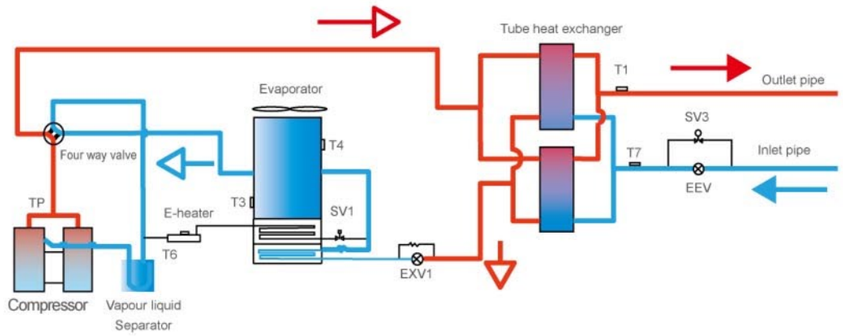


### Schematic diagram of single connected heat pump system

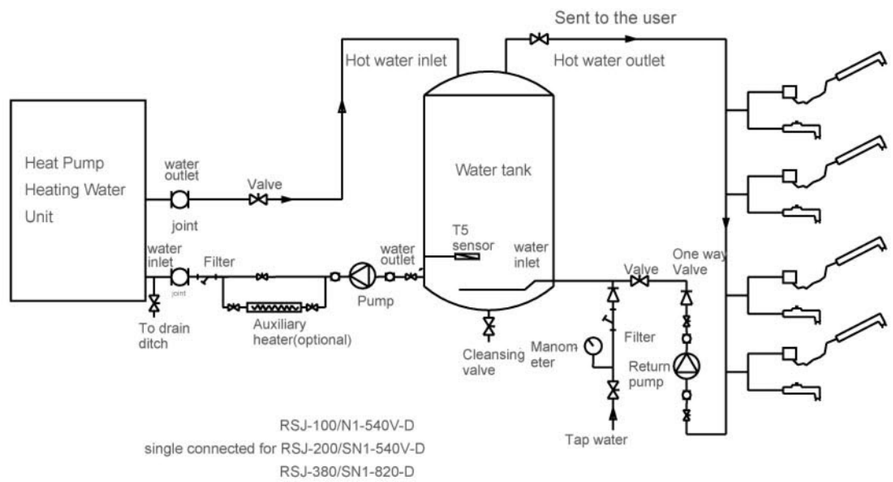

## Heat pump units schematic diagram

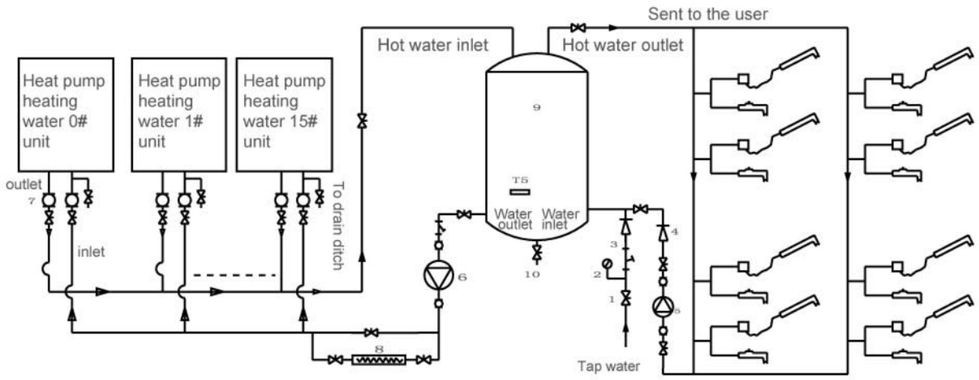


A maximum of 16 heat pump heating water units can be connected in parallel

## Direct heating & cycle heating(R410a)

| Model | | | CSJ-100/N1-540V-D | CSJ-200/SN1-540V-D | CSJ-380/SN1-820-D |
|---|---|---|---|---|---|
| Power supply | | Ph-V-hz | 1-220~240-50/60 | 3-380~415-50/60 | 3-380-50/60 |
| Running ambient temp | | °C | -7~43 | | |
| Outwater Temp | | °C | Default 56°C, 40°C~60°C | | |
| Water Heating | Capacity | kW | 11.2 | 20.4 | 43.0 |
| | Input | kW | 2.85 | 5.20 | 10.50 |
| | COP | kW/kW | 3.93 | 3.9 | 4.1 |
| | Max. input current | A | 18.2 | 13 | 26.7 |
| Outdoor unit | Dimension (W×H×D) | mm | 800×1,080×740 | 800×1,080×740 | 997×1,771×894 |
| | Packing (W×H×D) | mm | 810×1,185×770 | 810×1,185×770 | 1,105×1,965×920 |
| | Net/Gross weight | kg | 121 / 129 | 145 / 152 | 290 / 297 |
| Outdoor noise level | | dB(A) | 56 | 58 | 62 |
| Refrigerant type/Quantit | | Kg | R410A 1.5 | R410A 2.8 | R410A 5.7 |
| Design pressure | | MPa | 4.4/2.6 | 4.4/2.6 | 4.4/2.6 |
| Compressor | Model | | ZP36KSE-PFZ-522 | ZP67KCE-TFD-522 | ZP67KCE-TFD-420 |
| | Type | | SCROLL | SCROLL | SCROLL |
| | Brand | | COPELAND | COPELAND | COPELAND |
| | Capacity | Btu | 30,000 | 55,000 | 55,000×2 |
| | Input | kW | 2.94 | 5.20 | 5.2×2 |
| outdoor fan motor | Model | | YDK140-6N | YDK220-6R | YDK550-6E |
| | Brand | | welling | YONGAN/DAYANG | YONGAN |
| | Input | W | 230×1 | 360×1 | 865×1 |
| | Speed(hi/lo) | r/min | 735 / 530 | 930 / 770 | 830 / 710 |
| Outdoor air flow | | m³/h | 4,616 | 6,874 | 12,684 |
| water pipeline | water inlet pipe | mm | DN25 | DN25 | DN25 |
| | water outlet pipe | mm | DN25 | DN25 | DN32 |
| Wire controller | | | KJR-16B | KJR-16B | KJR-16B |
| Hot Water Yield | | m³/h | 0.26 | 0.52 | 1.0 |
| Loading Quantity | 20'/40'/40H | Pcs | 21/42/84 | 21/42/84 | 12/26/26 |

Remark:
1. The test conditions: outdoor temp. 20/15°C(DB/WB), inlet water temp. 15°C, outlet water temp. 55°C.
2. The specification may be changed for product improvement, please refer to the nameplate



# Direct &cycle heating (R22)

**CSJ-100-540V-C**
**CSJ-200/S-540V-C**
**CSJ-300/S**
**CSJ-380/S-820**
**CSJ-770/S-820**

Ambient: -7°C~43°C

## Features

- Free modular combination.
- Water outlet temperature set freely: 40~60℃.
- The unique defrosting flow path.
  Air side reserved special defrosting flow path, when the system is defrosting, the four-way valve is reversing , the system will absorb energy from special defrosting flow path, the defrosting progress will have no impact on water temperature.
- Double heat source for defrosting.
  The units use the refrigerant heating technology to increase the total absorption energy.
- Double throttling technology to ensure the temperature of base plate.
- High efficiency compressor.
  Copeland's efficient scroll compressor.
  Flexible design, Low temperature reliable operation.
- Hot water valve supplies hot water with stable temperature and expands the life span of compressor.

## Heat pump units schematic diagram

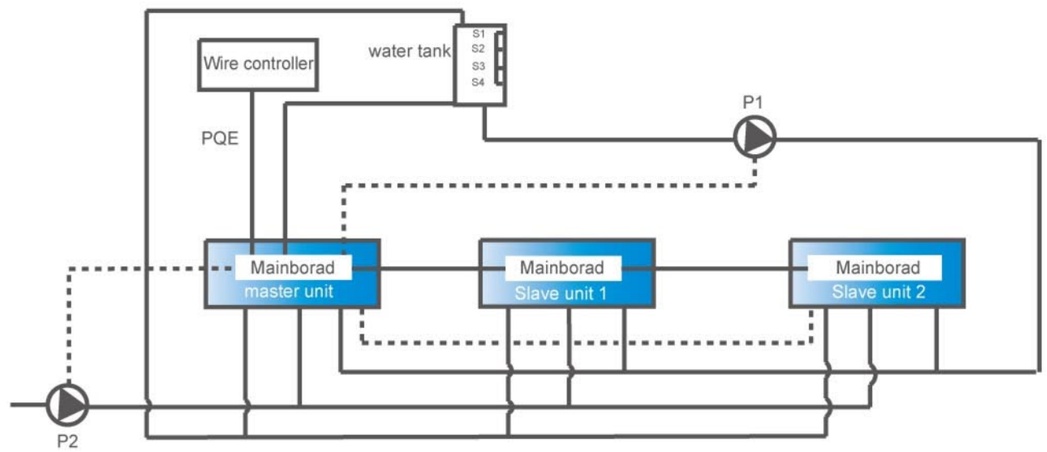

## ■ Direct-heating and cycle heating (R22/R407c)

| Model | | | CSJ-100/N1-540V-C | CSJ-200/SN1-540V-C | CSJ-300/S | CSJ-380/S-820 | CSJ-770/S-820 |
|---|---|---|---|---|---|---|---|
| Power supply | | Ph-V-hz | 1-220~240-50 | 3-380~415-50 | 3-380~415-50 | 3-380~415-50 | 3-380~415-50 |
| Running ambient temp | | °C | -7~43 | | | | |
| Outwater Temp | | °C | Default 56°C, 40°C~60°C | | | | |
| Water Heating | Capacity | kW | 10.3 | 20.4 | 26.0 | 38.5 | 77.0 |
| | Input | kW | 2.71 | 5.20 | 6.10 | 8.70 | 17.40 |
| | COP | kW/kW | 3.80 | 3.9 | 4.3 | 4.4 | 4.4 |
| | Max. input current | A | 13.2 | 10.0 | 15.0 | 19.0 | 41.0 |
| Outdoor unit | Dimension (W×H×D) | mm | 800×1,080×740 | 800×1,080×740 | 997×1,771×894 | 997×1,771×894 | 2,506×1,815×960 |
| | Packing (W×H×D) | mm | 810×1,185×770 | 810×1,185×770 | 1,105×1,965×920 | 1,105×1,965×920 | 2,575×2,015×995 |
| | Net/Gross weight | kg | 121 / 129 | 145 / 152 | 250 / 267 | 290 / 297 | 680 / 710 |
| Outdoor noise level | | dB(A) | 56 | 58 | 62 | 62 | 62 |
| Refrigrant type/Quantity | | Kg | R22 1.6 | R22 2.7 | R22 3.5 | R22 5.7 | R22 11.4 |
| Design pressure | | MPa | 3.3/1.65 | 3.3/1.65 | 3.3/1.65 | 3.3/1.65 | 3.3/1.65 |
| Compressor | Model | | ZR34K3-PFJ-522 | ZR61KC-TFD-522 | ZR81KC-TFD-522 | VR125KS-TFP-522 | ZR61KC-TFD-420×4 |
| | Type | | SCROLL | SCROLL | SCROLL | SCROLL | SCROLL |
| | Brand | | COPELAND | COPELAND | COPELAND | COPELAND | COPELAND |
| | Capacity | Btu | 28, 000 | 49, 700 | 68,000 | 106,000 | 49,700×4 |
| | Input | kW | 2.52 | 4.43 | 5.8 | 9.0 | 4.43×4 |
| outdoor fan motor | Model | | YDK140-6N | YDK220-6R | YDK400-8-YA | YDK550-6E | YDK550-6E×2 |
| | Brand | | welling | YONGAN/DAYANG | welling | YONGAN | YONGAN |
| | Input | W | 230×1 | 360×1 | 670×1 | 865×1 | 865×1 |
| | Speed(hi/lo) | r/min | 735 / 530 | 930 / 770 | 670/550 | 830 / 710 | 830 / 710 |
| Outdoor air flow | | $m^3/h$ | 4,616 | 6,874 | 10,000 | 126,84 | 12,684 |
| water pipe | water inlet pipe | mm | DN25 | DN25 | DN25 | DN25 | DN25 |
| | water outlet pipe | mm | DN25 | DN25 | DN32 | DN32 | DN32 |
| Wire controller | | | KJR-16B | KJR-16B | KJR-16B | KJR-16B | KJR-16B |
| Hot Water Yield | | $m^3/h$ | 0.26 | 0.52 | 0.7 | 1.0 | 2.0 |
| Loading Quantity | 20'/40'/40H | Pcs | 21/42/84 | 21/42/84 | 12/26/26 | 12/26/26 | 4/8/8 |

Remark:

1. The test conditions: outdoor temp. 20/15°C(DB/WB), inlet water temp. 15°C, outlet water temp. 55°C.
2. The specification may be changed for product improvement, please refer to the nameplate.

## The Engineering Application Schemes

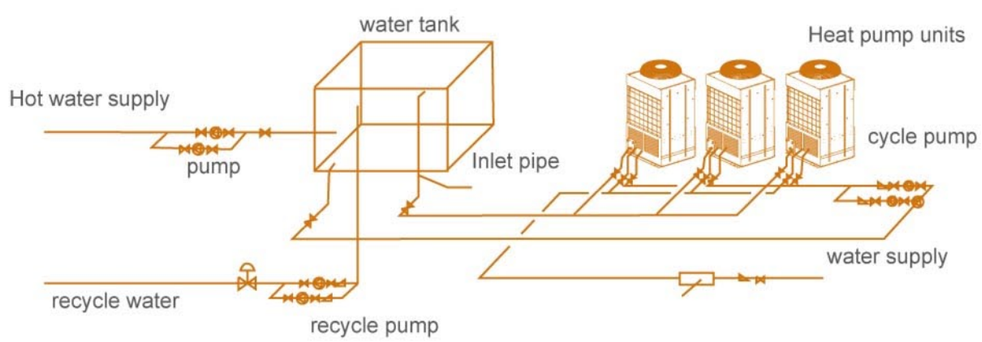




# Cycle heating

**CSJ-100/M-820**
**CSJ-200/MS-820**
**CSJ-380/MS-820**

Ambient: -7°C~43°C

## Features

- Free modular combination.
- Water output temperature: 40°C~55°C.
- Two refrigerant types: R407c/R22.
- Auto-restart function.
- Easy control and restart function.

## Simple refrigerating system diagram

### 10/20kw refrigerating system diagram

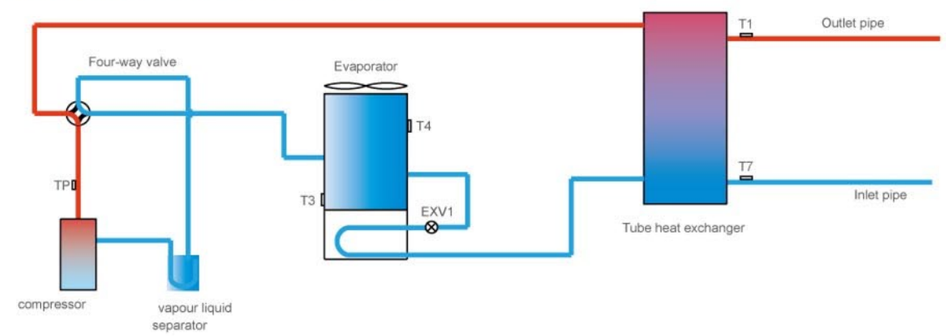


### 38kw refrigerating system diagram

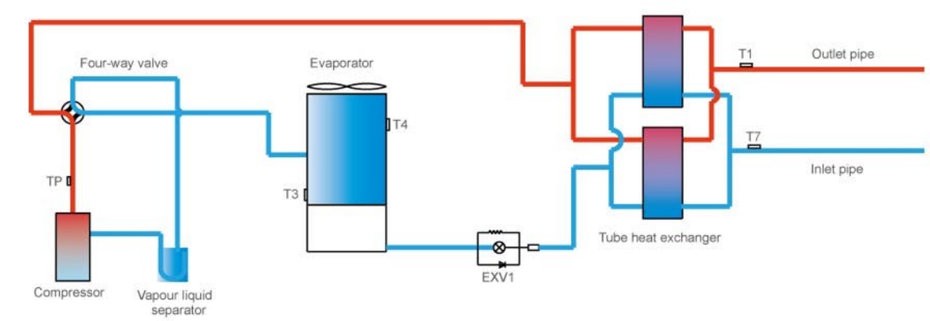

## Unit system connection diagram

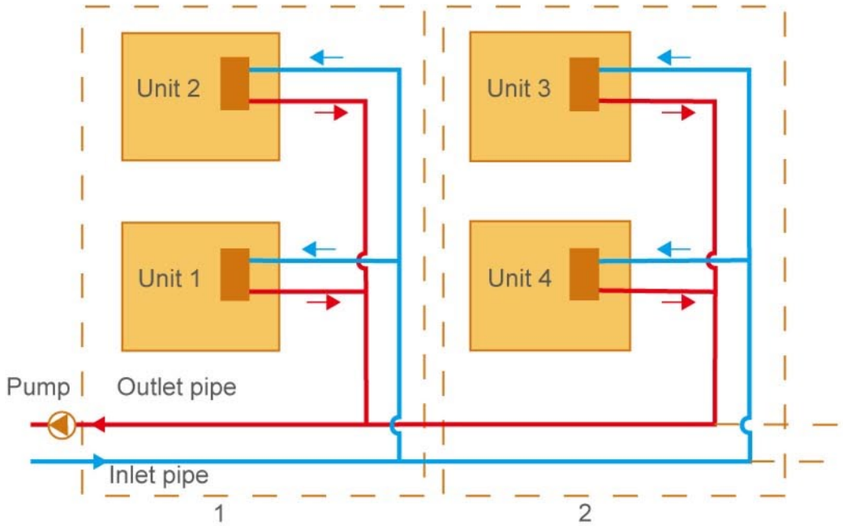


### ■ Cycle type(R22/R407c)

| Model | | | CSJ-100/M-540V | CSJ-200/MS-540V | CSJ-380/MS-820 |
|---|---|---|---|---|---|
| Power supply | | Ph-V-hz | 1-220-50 | 3-380-50 | 3-380-50 |
| Running ambient temp | | °C | -7~43 | | |
| Outwater Temp | | °C | Default 50°C, 30°C~55°C | | |
| Water Heating | Capacity | kW | 9.5 | 19.0 | 36.8 |
| | Input | kW | 2.4 | 4.2 | 8.45 |
| | COP | kW/kW | 4.04 | 4.52 | 4.36 |
| | Max. input current | A | 16.0 | 10.5 | 22.0 |
| Outdoor unit | Dimension (W×H×D) | mm | 780×1,060×740 | 780×1,060×740 | 997×1,771×894 |
| | Packing (W×H×D) | mm | 810×1,185×770 | 810×1,185×770 | 1,105×1,965×920 |
| | Net/Gross weight | kg | 119 / 127 | 145 / 152 | 285 / 297 |
| Outdoor noise level | | dB(A) | 56 | 58 | 62 |
| Refrigerant type/Quantit | | Kg | R22 2.3 | R22 3.5 | R22 5.7 |
| Design pressure | | MPa | 3.3/1.65 | 3.3/1.65 | 3.3/1.65 |
| Compressor | Model | | ZR34KH-PFJ-522 | ZR61KH-TFD-522 | VR125KS-TFP-522 |
| | Type | | SCROLL | SCROLL | SCROLL |
| | Brand | | COPELAND | COPELAND | COPELAND |
| | Capacity | kW | 8.2 | 14.6 | 31.6 |
| | Input | kW | 2.5 | 4.4 | 9.00 |
| outdoor fan motor | Model | | YDK140-6N | YDK220-6R | YDK400-8-YA |
| | Brand | | welling | changzhouyongan | welling |
| | Input | W | 270×1 | 400×1 | 600×1 |
| | Speed(hi/lo) | r/min | 670/550 | 670/550 | 735 / 530 |
| Outdoor air flow | | m³/h | 3,000 | 8,000 | 13,000 |
| water pipeline | water inlet pipe | mm | DN25 | DN32 | DN32 |
| | water outlet pipe | mm | DN25 | DN32 | DN32 |
| Wire controller | | | KJR-08B/D | KJR-08B/D | KJR-08B/D |
| Hot Water Yield | | m³/h | 0.26 | 0.52 | 1.0 |
| Loading Quantity | 20'/40'/40H | Pcs | 21/42/84 | 21/42/84 | 12/26/26 |

Remark:
1. The test conditions: outdoor temp. 20/15°C(DB/WB), inlet water temp. 15°C, outlet water temp. 55°C.
2. The specification may be changed for product improvement, please refer to the nameplate



# Dimension

## CSJ-770/S-820

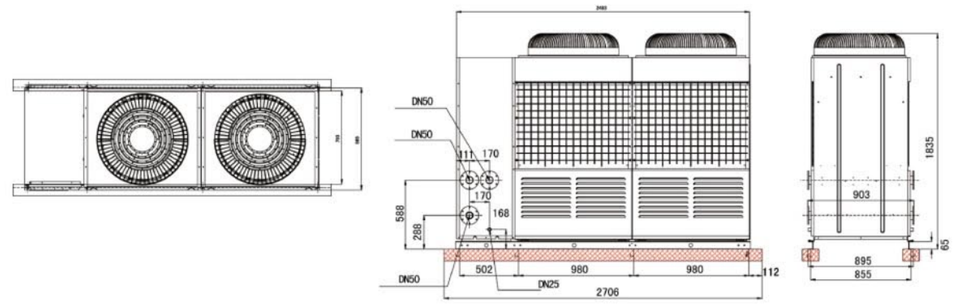


## CSJ-380/S-820-C CSJ-300/S-820-C

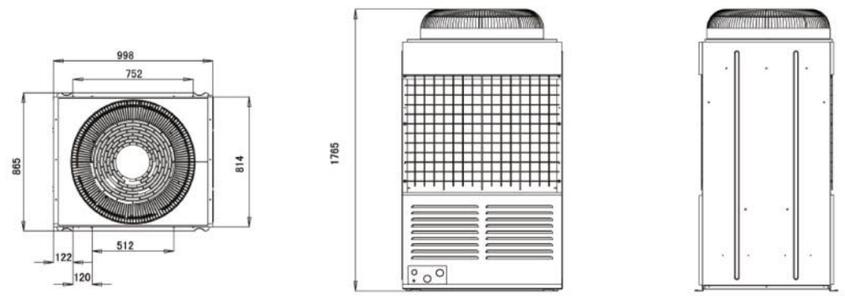


## CSJ-200/S-540V CSJ-100-540V

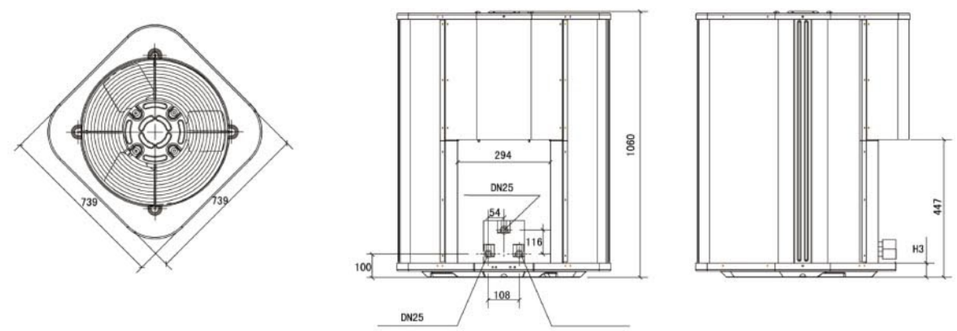

# Wire controller (KJR-16B/E)

## Features

- Easy control.
- Set time on/ off freely.
- Set outlet water temperature from 40°C to 60°C .
- LCD display.
- Select auto mode and manual mode freely.
- Free modular combination.
- Display error code and check operation parameter.

## Name of keys on the wire controller

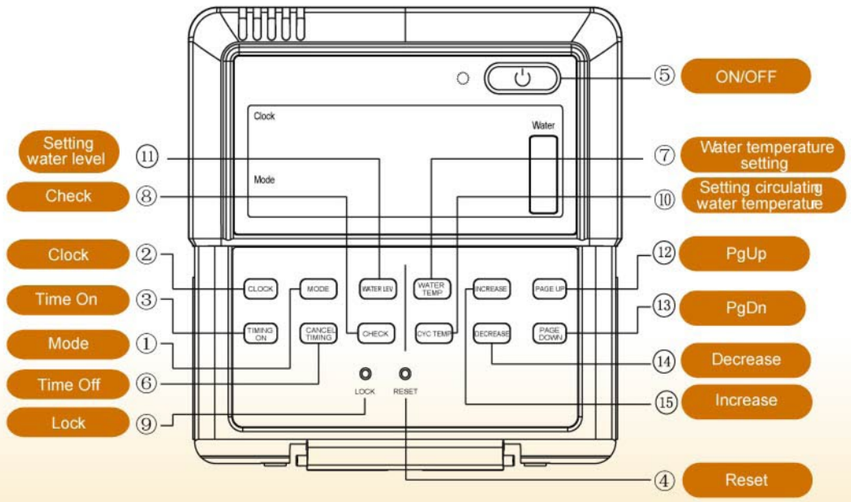


| Number | Name | Function |
|---|---|---|
| 1 | Mode | Press the proper key to select the “Auto Mode” or “Manual Mode”. |
| 2 | Clock | At each power-on,the clock is initialized to 00:00.The time can remain unchanged and can be adjusted through the “Increase”and “Decrease”key. |
| 3 | Time On | Every time when you press the “Time On” key, the HOUR and MINUTE of timing startup blink at a frequency of 1Hz. |
| 4 | Reset | Press this button,the current setting will be cancelled and the wire controller enters the reset status. |
| 5 | ON/OFF | In the power-off status, press this key once to startup the unit;In the startup status, press this key once to shutdown the unit |
| 6 | Time Off | This key can set the time of turning off the outdoor unit |
| 7 | Water temperature setting | Press this key to enter the procedure of setting water temperature signals. |
| 8 | Check: | Press this key to query the status information of outdoor units 0~15 (outdoor unit 0 by default). |
| 9 | Lock button | Press this button to lock the current setting.Press this button again to unlock. |
| 10 | Setting the circulating water temperature | This key is used to set the inlet temperature of the circulating heating water. |
| 11 | Setting the water level | This key is used to set the outdoor water level. |

## Name and function description of LCD screen

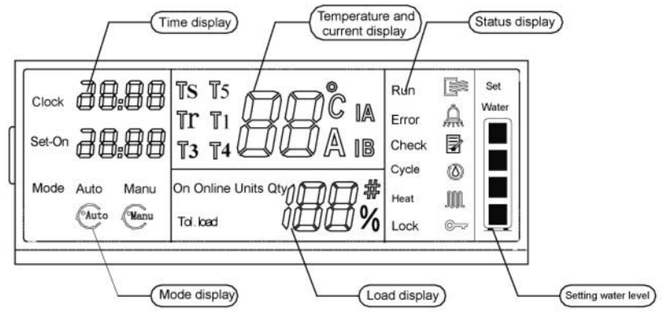


## Installation Procedure

### The wiring procedure and principles are shown in the figure:

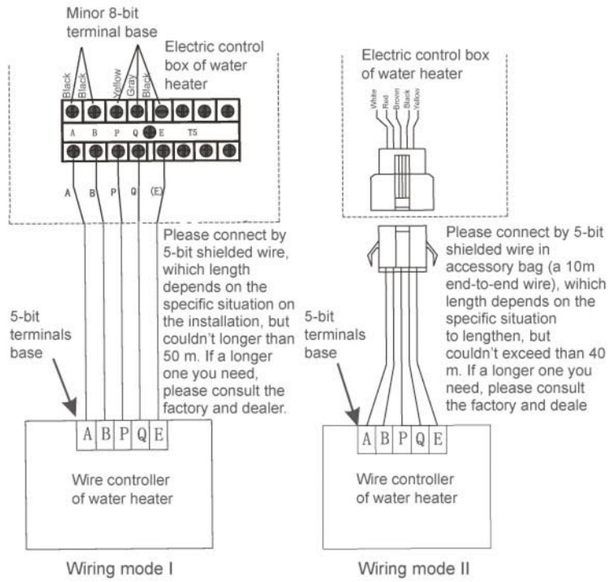


Choose the wiring mode according to your actual model.

### The whole wire controller installation

The wired controller allows to be installed into the wall by fixing the bottom directly or fixing the device to a mounting cabinet.

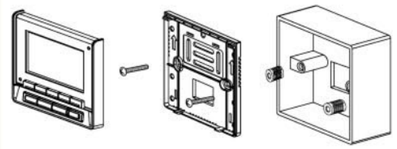

## Fault code list:

| | |
|---|---|
| E 0 | Inlet water pressure detection fault(Only main equipment) |
| E 1 | Power supply wire phase fault |
| E 2 | Communication fault |
| E 3 | Fault of outlet water temperature |
| E 5 | Fault of the pipe of condenser temperature |
| E 6 | Fault of a outdoor ambient temperature |
| E 7 | Fault of a electric heater temperature |
| E 8 | Fault of detecting circulating water pressure |
| E 9 | Fault of power failure memory (The wire controller can display without power failure memory function, but the startup and shutdown are normal) |
| P 0 | System low pressure protection |
| P 1 | System high pressure protection |
| P 2 | System2 current protection |
| P 3 | System1 current protection |
| P 8 | Over high outlet water temperature protection |

# ACCESSORIES

## Standard accessories

### Fig.1(1*)

| Unit | Installation& Operation Manual | Wire controller assembly | Water Tank Temperature sensor | Y-shaped filter |
|---|---|---|---|---|
| Qty. | 1 | 1 | 1 | 1 |
| Shape | | | | |
| Purpose | —— | Control units and display units status | Water tank temperature inspection | For pipeline connection |

### Fig.2 (2*)

| Unit | Installation& Operation Manual | Service guide | Water Tank Temperature sensor | Y-shaped filter |
|---|---|---|---|---|
| Qty. | 1 | 1 | 1 | 1 |
| Shape | | | | |
| Purpose | —— | —— | Water tank temperature inspection | For pipeline connection |

## Optional Accessories

### Fig.3 (3*)

| Unit | One-station level switch | Four-station level switch | Wire controller | Wire controller lunk |
|---|---|---|---|---|
| Qty. | 1 | 1 | 1 | 1 |
| Shape | | | | |
| Purpose | —— | —— | Control units and display units status | Connect wire controller to the unit |

**Note:**

(1*) Application model :
CE-RSJ-100/N1-540V-D CE-RSJ-200/SN1-540V-D CE-RSJ-380/SN1-820-D

(2*) (3*) Application model :
RSJ-100-532V RSJ-200/S-532V RSJ-100-540V-C RSJ-200/S-540V-C RSJ-380/S-820-C
RSJ-380/S-820-E RSJ-770/S-820-C RSJ-770/S-820-E

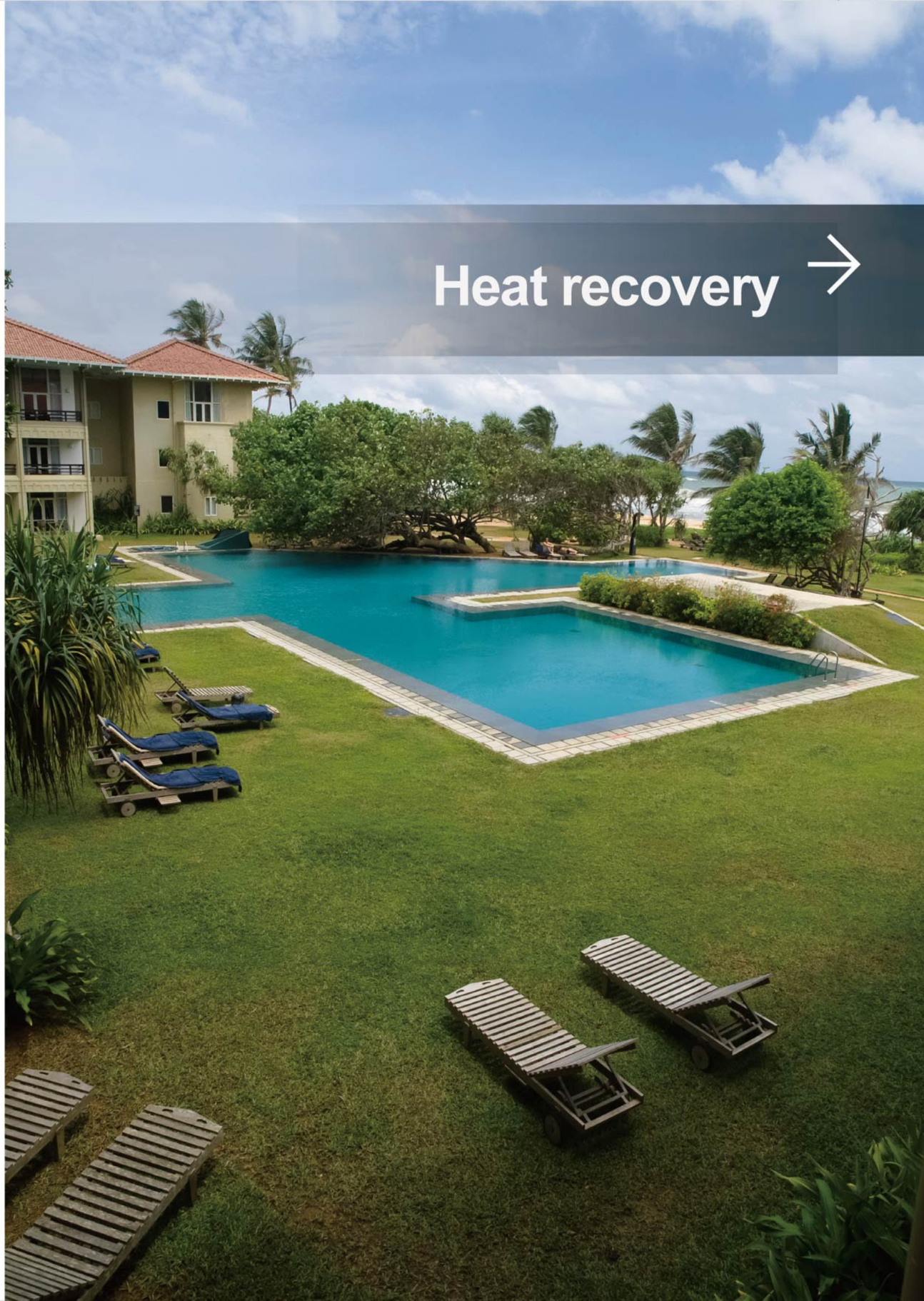

**KCSJF-26(35)/C**
**KCSJF-35(50)/C**
**KCSJF-50(72)/C**

Ambient: -7°C~43°C

## Features

- Max. water output temperature: 55°C.
- Heat recovery, energy saving.
- Comprehensive COP can reach 6.0.
- One-stop solution for AC space cooling/heating + sanitary hot water.
- Built-in water pump.
- Easy installation and maintenance.

## Solution for AC space cooling/heating + sanitary hot water

## Unitary heat recovery system

| Model(outdoor unit) | | | KCSJF-25(35)/C | KCSJF-35(50)/C | KCSJF-50(72)/C |
|---|---|---|---|---|---|
| Power supply | | Ph-V-Hz | 1-220-50 | 1-220-50 | 1-220-50 |
| Running ambient temp | | °C | -7~43 | -7~43 | -7~43 |
| Outwater Temp | | °C | Default 50°C, 40°C~55°C | | |
| Water tank size | | Ltr | 260/300/350/400/500 | | |
| Cooling | Capacity | kW | 2.5 | 3.5 | 5 |
| | rated Input | kW | 0.92 | 1.23 | 1.87 |
| | Cop | kW/kW | 2.72 | 2.85 | 2.67 |
| Heating | Capacity | kW | 2.8 | 3.8 | 5.8 |
| | rated Input | kW | 0.92 | 1.23 | 1.87 |
| | Cop | kW/kW | 3.04 | 3.09 | 3.10 |
| Water heating | Capacity | kW | 3.5 | 5 | 7.2 |
| | rated Input | kW | 0.92 | 1.23 | 1.87 |
| | Cop | kW/kW | 3.80 | 4.07 | 3.85 |
| Max. input current | | A | 6.50 | 8.50 | 12.50 |
| Unit | Dimension ((W×H×D) | mm | 790×736×260 | 790×736×260 | 840×904×314 |
| | Packing (W×H×D) | mm | 905×810×355 | 905×810×355 | 965×1,010×395 |
| | Net/gross weight | kg | 54/57 | 60/63 | 81/84 |
| Noise level | | dB(A) | 52 | 52 | 52 |
| Refrigerant type/quantity | | kg | R22/1.03 | R22/1.33 | R22/2 |
| Refrigerant design pressure | | MPa | 3.3/1.65 | 3.3/1.65 | 3.3/1.65 |
| Air flow | | $m^3/h$ | 1,300 | 1,700 | 2,400 |
| Compressor | Model | | PH180X1C-8DZD3 | PH225X2C-8FTC1 | PH340X2CS-8KUC1 |
| | Type | | Rotary | Rotary | Rotary |
| | Brand | | Toshiba | Toshiba | Toshiba |
| | Capacity | kW | 3.02 | 3.87 | 5.86 |
| | Input | kW | 0.97 | 1.23 | 1.89 |
| Fan motor | Model | | YDK24-6R | YDK36-6R | YDK65-6N |
| | Brand | | welling | welling | welling |
| | Input | w | 50 | 50 | 125 |
| | Speed | r/min | 750/360 | 775/510 | 830/450 |
| Water pipeline | Water inlet pipe | mm | DN20 | DN20 | DN20 |
| | Water outlet pipe | mm | DN20 | DN20 | DN20 |
| | Max. pressure | MPa | 1.0 | 1.0 | 1.0 |
| Hot water yield | | $m^3/h$ | 0.075 | 0.11 | 0.155 |
| Water pump, lift head | | m | 5.5 | 5.5 | 5.5 |
| Loading Quantity | | Pcs | 76/160/240 | 76/158/240 | 64/134/134 |

Remark:
1. The test conditions: outdoor temp. 20/15°C(DB/WB), inlet water temp. 15°C, outlet water temp. 55°C.
2. The specification may be changed for product improvement, please refer to the nameplate.

# Heat Recovery (Digital VRF)

**KCSJ-D120(160)/SC-580**
**KCSJ-D120(160)/C-580**
**KCSJ-D140(180)/SC-580**
**KCSJ-D140(180)/C-580**
**KCSJ-D160(200)/SC-580**
**CE-KCSJ-D160(200)/SCN2-580**

Ambient: -7°C~43°C

## Features

- Max. water output temperature: 55°C.
- Optional: 12Kw (1/3 phase), 14Kw (1/3 phase)
- Comprehensive COP can reach 6.55.
- Heat recovery, energy saving.
- VRF indoor units free-match (maximum 6 sets).
- Compact design, tube heat exchanger.
- One-stop solution for VRF AC cooling/heating + sanitary hot water.
- Built-in water pump.

## Solution for VRF AC space cooling/heating + sanitary hot water

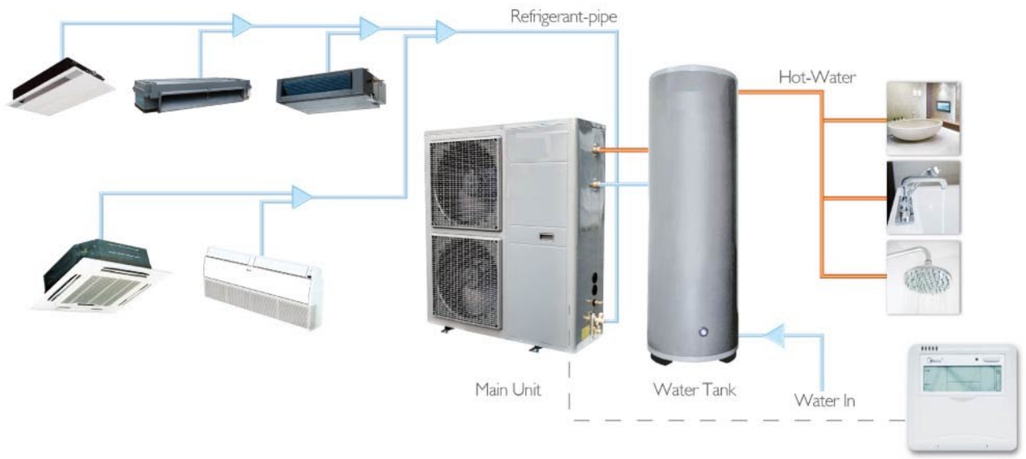


## Digital scroll VRF heat recovery system R22/R407c

| Model(outdoor unit) | | | CE-KCSJ-D160(200)/SCN2-580 | KCSJ-D120(160)/SC-580 | KCSJ-D120(160)/C-580 | KCSJ-D140(180)/SC-580 | KCSJ-D140(180)/C-580 | KCSJ-D160(200)/SC-580 |
|---|---|---|---|---|---|---|---|---|
| Power supply | | Ph-V-Hz | 3-380-50 | 3-380-50 | 1-220-50 | 3-380-50 | 1-220-50 | 3-380-50 |
| Running ambient temp | | °C | -7~43 | -7~43 | | | | |
| Outwater Temp | | °C | Default 50°C, 40°C~55°C | Default 50°C, 30°C~55°C | | | | |
| Water tank size | | Ltr | 300 | 300 | 300 | 300 | 300 | 300 |
| Cooling | Capacity | kW | 16 | 12 | 12 | 14 | 14 | 16 |
| | Input | kW | 5.8 | 4.6 | 4.9 | 5.2 | 5.2 | 5.8 |
| | Cop | kW/kW | 2.76 | 2.61 | 2.45 | 2.69 | 2.69 | 2.76 |
| Heating | Capacity | kW | 16.5 | 13 | 13 | 15 | 15 | 16.5 |
| | Input | kW | 4.6 | 3.9 | 4.1 | 4 | 4.2 | 4.2 |
| | Cop | kW/kW | 3.59 | 3.33 | 3.17 | 3.75 | 3.57 | 3.93 |
| Water heating | Capacity | kW | 20 | 16 | 16 | 18 | 18 | 20 |
| | Input | kW | 6.6 | 5.5 | 4.9 | 5.8 | 5.5 | 6.2 |
| | Cop | kW/kW | 3.03 | 2.91 | 3.27 | 3.10 | 3.27 | 3.23 |
| Max. input current | | A | 18 | 16 | 35 | 17 | 42 | 18 |
| Unit | Dimension (W×H×D) | mm | 1,069×1,259×402 | 1,069×1,259×402 | 1,069×1,259×402 | 1,069×1,259×402 | 1,069×1,259×402 | 1,069×1,259×402 |
| | Packing (W×H×D) | mm | 1,188×1,385×498 | 1,205×1,390×500 | 1,205×1,390×500 | 1,205×1,390×500 | 1,205×1,390×500 | 1,205×1,390×500 |
| | Net/gross weight | kg | 179/188 | 171/180 | 155/162 | 176/185 | 176/185 | 179/188 |
| Noise level | | dB(A) | 62 | 58 | 58 | 58 | 58 | 58 |
| Refrigerant type/quantity | | kg | R407C/5.8 | R22/4.5 | R22/4.5 | R22/5 | R22/5 | R22/5.8 |
| Refrigerant design pressure | | MPa | 3.3/1.18 | 3.3/1.65 | 3.3/1.65 | 3.3/1.65 | 3.3/1.65 | 3.3/1.65 |
| Air flow | | m³/h | 4,362/6,044 | 6,000 | 6,000 | 6,000 | 6,000 | 6,000 |
| Compressor | Model | | ZRD72KCE-TFD-532 | ZRD61KC-TFD-532 | ZRD61KC-PFZ-532 | ZRD68KC-TFD-532 | ZRD68KC-PFZ-532 | ZRD72KC-TFD-532 |
| | Type | | Digital scroll | Digital scroll | Digital scroll | Digital scroll | Digital scroll | Digital scroll |
| | Brand | | Copeland | Copeland | Copeland | Copeland | Copeland | Copeland |
| | Capacity | kW | 16.7 | 14.95 | 14.9 | 16.848 | 16.8 | 17.6 |
| | Input | kW | 5.4 | 4.55 | 4.64 | 4.96 | 5.15 | 5.33 |
| Fanmotor | Model | | YDK100-6A | YDK100-6A | YDK100-6A | YDK100-6A | YDK100-6A | YDK100-6A |
| | Brand | | welling | welling | welling | welling | welling | welling |
| | Input | w | 185/120 | 185/120 | 185/120 | 185/120 | 185/120 | 185/120 |
| | Speed | r/min | 860/610 | 860/610 | 860/610 | 860/610 | 860/610 | 860/610 |
| Water pipeline | Water inlet pipe | mm | DN25 | DN25 | DN25 | DN25 | DN25 | DN25 |
| | Water outlet pipe | mm | DN25 | DN25 | DN25 | DN25 | DN25 | DN25 |
| | | m³/h | 0.43 | 0.34 | 0.34 | 0.39 | 0.39 | 0.43 |
| | | m | 28 | 28 | 28 | 28 | 28 | 28 |
| Loading Quantity | 20'/40'/40H | Pcs | 21/44/44 | 21/43/43 | 21/43/43 | 21/43/43 | 21/43/43 | 21/43/43 |

Remark:
1. The test conditions: outdoor temp. 20/15°C(DB/WB), inlet water temp. 15°C, outlet water temp. 55°C.
2. The specification may be changed for product improvement, please refer to the nameplate.

# Heating recovery(Tri-thermal)

## Tri-thermal Features

- R410a gas, environmentally friendly.
- Three new technology.
  DC inverter technology.
  Air to water heat pump technology.
  Heat recovery technology.
- 5 Modes: SH/SC/Sanitary/SH+Sanitary/SC+Sanitary.
- CE approval.
- Provide the one-stop solution for house heating/cooling.
- Compatible with all mini VRF series indoor units.
- Optional floor heating.

## Solution for Tri-thermal space cooling/heating + sanitary hot water + floor heating

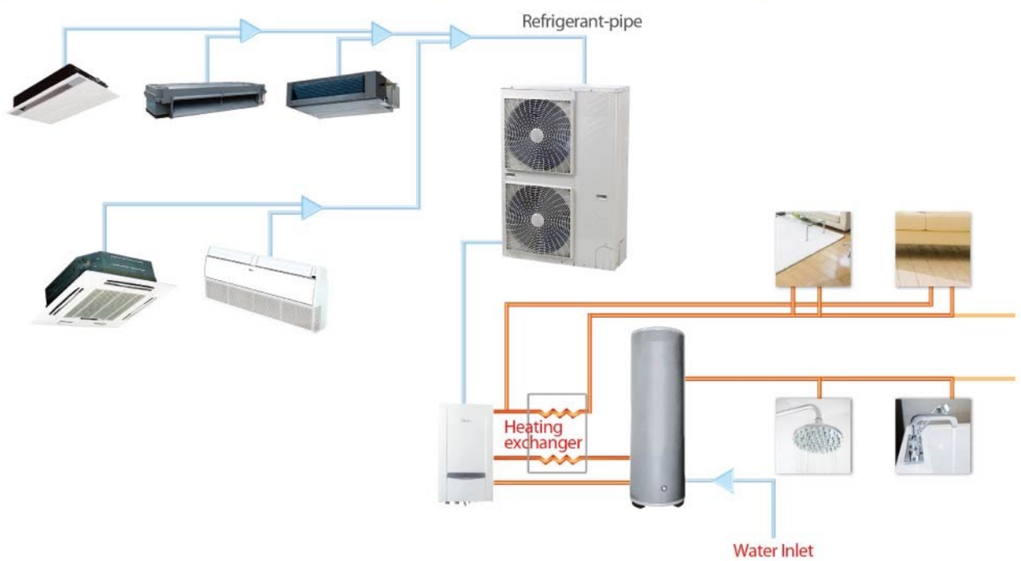




## Tri-thermal specification

| Model | | | KCSJF-V120/N1-610 | KCSJF-V140/N1-610 | KCSJF-V160/N1-610 |
|---|---|---|---|---|---|
| Power supply | | Ph-V-hz | 1-220-50 | 1-220-50 | 1-220-50 |
| Cooling | Capacity | kW | 12 | 14 | 15.5 |
| | Input | kw | 4.4 | 5.2 | 5.9 |
| Heating | Capacity | kW | 13.2 | 15.4 | 17 |
| | Input | kW | 3.9 | 4.8 | 5.6 |
| Water Heating | Capacity | kW | 16 | 18 | 19.5 |
| | Input | kW | 4.4 | 4.9 | 5.4 |
| Max. input consumption | | kW | 6.2 | 6.6 | 7.1 |
| Max. input current | | A | 30 | 32 | 35 |
| startting current | | A | 3 | 3 | 3 |
| Compressor | Model | | TNB306FPGM | TNB306FPGM | TNB306FPGM |
| | Type | | Rotary | Rotary | Rotary |
| | Brand | | Mitsubishi | Mitsubishi | Mitsubishi |
| | Supplier | | Mitsubishi | Mitsubishi | Mitsubishi |
| | Capacity | kW | 9.86 | 9.86 | 9.86 |
| | Input | kW | 3.08 | 3.08 | 3.08 |
| | Rated current(RLA) | A | 13.5 | 13.5 | 13.5 |
| | Locked rotor Amp(LRA) | A | / | / | / |
| | Thermal protector | | / | / | / |
| | Capacitor | uF | / | / | / |
| | Refrigerant oil | ml | fv50s 870+630ml | fv50s 870+630ml | fv50s 870+630ml |
| outdoor fan motor | Model | | WZDK100-38G | WZDK100-38G | WZDK100-38G |
| | Brand | | Panasonic | Panasonic | Panasonic |
| | Input | W | 2×85 | 2×85 | 2×85 |
| | Capacitor | uF | / | / | / |
| | Speed(hi/o) | r/min | 800 | 800 | 800 |
| outdoor coil | a.Number of rows | | 2 | 2 | 2 |
| | b.Tube pitch(a)x row pitch(b) | mm | 22X19.05 | 22×19.05 | 22×19.05 |
| | Fin spacing | mm | 1.6 | 1.6 | 1.6 |
| | Fin type | | Hydrophilic aluminium | Hydrophilic aluminium | Hydrophilic aluminium |
| | Tube outer dia.and type | mm | Φ7.94 innergroove tube | Φ7.94 innergroove tube | Φ7.94 innergroove tube |
| | Coil length x height x width | mm | 870×1,276×38.1 | 870×1,276×38.1 | 870×1,276×38.1 |
| | Number of circuits | | 7 | 7 | 7 |
| Outdoor air flow | | $m^3/h$ | 6,000 | 6,000 | 6,000 |
| Outdoor noise level | | dB(A) | 58 | 58 | 59 |
| Outdoor unit | Dimension (W×H×D) | mm | 981×1,328×400 | 981×1,328×400 | 981×1,328×400 |
| | Packing (W×H×D) | mm | 1,082×1,456×435 | 1,082×1,456×435 | 1,082×1,456×435 |
| | Net/Gross weight | kg | 96/107 | 96/107 | 96/107 |
| Refrigerant type/Quantity | | g | R410A/4,000 | R410A/4,200 | R410A/4,400 |
| Design pressure | | MPa | 4.4/2.6 | 4.4/2.6 | 4.4/2.6 |
| Refrigerant piping | Liquid/ Gas side( To indoor) | mm(inch) | 9.5/15.9 | 9.5/15.9 | 9.5/15.9 |
| | Max. pipe length | m | 220 | 220 | 220 |
| | Max. difference in level | m | 30 | 30 | 30 |
| Water piping | Max. pipe length | m | 10 | 10 | 10 |
| | Max. difference in level | m | 10 | 10 | 10 |
| Ambient temp | Air cooling mode | °C | -15~48 | -15~48 | -15~48 |
| | Air heating mode | °C | -15~27 | -15~27 | -15~27 |
| | water heating mode | °C | -15~43 | -15~43 | -15~43 |
| | Air cooling +water heating mode | °C | 12~43 | 12~43 | 12~43 |
| temperature range | Air cooling mode | °C | 17-30 | 17-30 | 17-30 |
| | Air heating mode | °C | 17-30 | 17-30 | 17-30 |
| | water heating mode | °C | 30-55 (50 default) | 30-55 (50 default) | 30-55 (50 default) |
| | Air cooling +water heating mode | °C | 30-55 (50 default) | 30-55 (50 default) | 30-55 (50 default) |
| Water pipeline diameter | Circulating Inlet water pipe | mm | DN25 | DN25 | DN25 |
| | Circulating Outlet water pipe | mm | DN25 | DN25 | DN25 |
| Hot water yeild | | $m^3/h$ | 0.35 | 0.4 | 0.43 |
| Outlet water temperature | | °C | 50°C(default), 30°C-55°C | 50°C(default), 30°C-55°C | 50°C(default), 30°C-55°C |
| Water pump,lift head | | m | 28 | 28 | 28 |

| Model | | LSX-300XP/A | LSX-300XP/E | LSX-200XP/E |
|---|---|---|---|---|
| Diamension | mm | Φ560×1905 | Φ580×1804 | Φ580×1319 |
| water pressure | MPa | <0.7 | <0.7 | <0.7 |
| Circulating water pipe spec | mm | DN25 | DN25 | DN25 |
| water inlet pipe spec | mm | DN15 | DN20 | DN20 |
| E-heater | | without E-heater | with E-heater | with E-heater |

Remark:
1. The test conditions: outdoor temp. 20/15°C(DB/WB), inlet water temp. 15°C, outlet water temp. 55°C.
2. The operation range:-7°C-43°C.
3. The specification may be changed for product improvement, please refer to the nameplate.

# Heat Recovery Indoor Unit Lineup

## One-way Cassette

**MDV-D XX Q1/N1-C**

| Model | 28 | 36 | 45 | 56 | 71 |
|---|---|---|---|---|---|
| Capacity | 2.8kW | 3.6kW | 4.5kW | 5.6 kW | 7.1 kW |

## Two-way Cassette

**MDV-D XX Q2/N1**

| Model | 22 | 28 | 36 | 45 | 56 | 71 |
|---|---|---|---|---|---|---|
| Capacity | 2.2kW | 2.8kW | 3.6kW | 4.5kW | 5.6 kW | 7.1kW |

## Compact Four-way Cassette

**MDV-D XX Q4/N1-A3**

| Model | 22 | 28 | 36 | 45 |
|---|---|---|---|---|
| Capacity | 2.2kW | 2.8kW | 3.6kW | 4.5kW |

## Four-way Cassette

**MDV-D XX Q4/N1-D**

| Model | 28 | 36 | 45 | 56 | 71 |
|---|---|---|---|---|---|
| Capacity | 2.8kW | 3.6kW | 4.5kW | 5.6 kW | 7.1 kW |

| Model | 80 | 90 | 100 | 112 | 140 |
|---|---|---|---|---|---|
| Capacity | 8.0 kW | 9.0 kW | 10.0 kW | 11.2 kW | 14.0 kW |

## Low Static Pressure Duct

**MDV-D XX T3/N1-B**

| Model | 18 | 22 | 28 | 36 | 45 | 56 |
|---|---|---|---|---|---|---|
| Capacity | 1.8kW | 2.2kW | 2.8kW | 3.6kW | 4.5kW | 5.6 kW |

## Concealed Duct Unit (A5 Type)

**MDV-D XX T2/N1X-BA5**

| Model | 22 | 28 | 36 | 45 | 56 |
|---|---|---|---|---|---|
| Capacity | 2.2kW | 2.8kW | 3.6kW | 4.5kW | 5.6 kW |

| Model | 71 | 80 | 90 | 112 | 140 |
|---|---|---|---|---|---|
| Capacity | 7.1kW | 8.0 kW | 9.0 kW | 11.2 kW | 14.0 kW |

## High Static Pressure Duct

**MDV-D XX DL/N1-C**

| Model | 71 | 80 | 90 | 112 |
|---|---|---|---|---|
| Capacity | 7.1kW | 8.0 kW | 9.0 kW | 11.2 kW |

| Model | 140 | 200 | 250 | 280 |
|---|---|---|---|---|
| Capacity | 14.0 kW | 20.0 kW | 25.0 kW | 28.0 kW |

## Ceiling & Floor

**MDV-D XX DL/N1-C**

| Model | 36 | 45 | 56 | 71 |
|---|---|---|---|---|
| Capacity | 3.6kW | 4.5kW | 5.6 kW | 7.1kW |

| Model | 80 | 90 | 112 | 140 |
|---|---|---|---|---|
| Capacity | 8.0 kW | 9.0 kW | 11.2 kW | 14.0 kW |

## Wall-mounted Type

**MDV-D XX G/N1-S**
**MDV-D XX G/DN1-S**
**MDV-D XX G/N1-YB**
**MDV-D XX G/DN1-YB**

| Model | 22 | 28 | 36 | 45 | 56 |
|---|---|---|---|---|---|
| Capacity | 2.2kW | 2.8kW | 3.6kW | 4.5kW | 5.6 kW |

## Floor Standing

MDV-D XX Z/N1-F1(F2)B MDV-D XX Z/N1-F4(F5)B MDV-D XX Z/N1-F3B

| Model | 22 | 28 | 36 | 45 |
|---|---|---|---|---|
| Capacity | 2.2kW | 2.8kW | 3.6kW | 4.5kW |

| Model | 56 | 71 | 80 |
|---|---|---|---|
| Capacity | 5.6 kW | 7.1kW | 8.0 kW |

## Console

**MDV-D XX Z/DN1-B**

| Model | 22 | 28 | 36 | 45 |
|---|---|---|---|---|
| Capacity | 2.2kW | 2.8kW | 3.6kW | 4.5kW |

## Fresh Air Processing Unit

**MDV-D XX T1/N1-FA**

| Model | 125 | 140 | 200 | 250 | 280 |
|---|---|---|---|---|---|
| Capacity | 12.5kW | 14kW | 20.0kW | 25.0kW | 28.0 kW |

CLIMA UNO
Via Pier Luigi Nervi, 188/G/25 - 04100 Latina (Italy)
Phone: +39 0773 629191 - Fax: +39 0773 603388
Email: info@climauno.com - www.climauno.com